Quick Install Guide for MEGATRON Swing Gate Operator

CONFORMS TO UL STD 325
UL CLASS - I, II, III, IV

CERTIFIED TO CAN/CSA STD
C22.2 NO. 247

SAFETY SENSORS REQUIRED

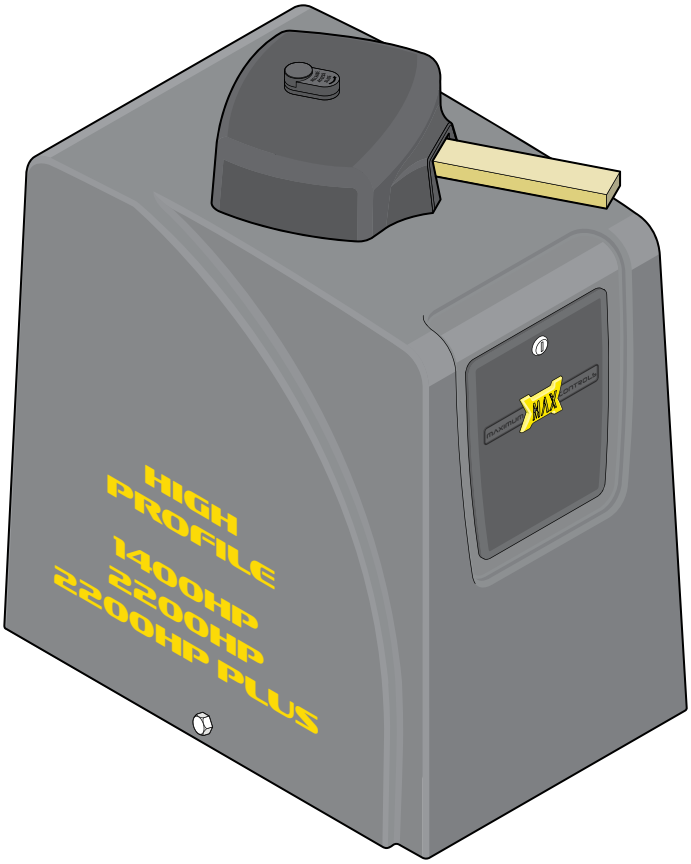

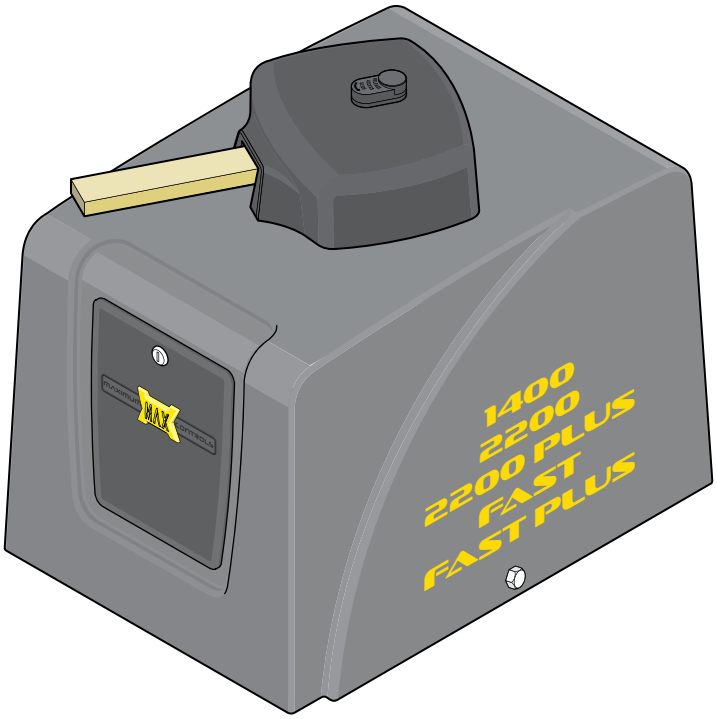

Residential / Commercial Brushless DC Swing Gate Operators

Made in USA

C ETL LISTED US
Intertek
4009963

MAXIMUM MAX CONTROLS

Version 10

www.max.us.com

TABLE OF CONTENTS

MEGATRON SPECIFICATIONS

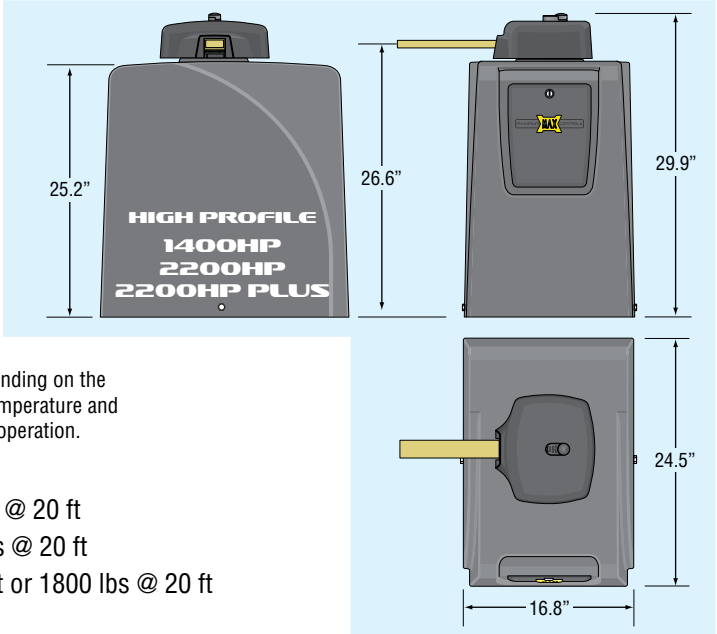

UL 325 Class of Operation - Class I, II, III, IV

Gate Type - Vehicular Swing Gate

Input AC Power/Amps - Switchable: 115VAC / 6 Amp, 1 phase or 230VAC / 2 Amp, 1 phase

Motor - 24VDC Brushless (equivalent to 1 HP AC motor)

Operating Temperature: -4°F to 158°F (-20°C to 70°C)

Cycles per Hour AC Input Power - Continuous

Battery Back-Up Cycles (BC-7 Battery Module-7 Amp/Hr Batteries fully charged)**:** - Approximately 450 cycles

NOTE: The number of gate cycles using **ONLY** battery back-up power will vary depending on the weight of the gate, the gate length, the operating condition of the gate hardware, temperature and the amount of charge the batteries have at the beginning of the battery power only operation.

Max Gate Weight / Length:

- **MAX Megatron 1400 and 1400HP -** 1400lbs @ 15 ft or 1200 lbs @ 20 ft
- **MAX Megatron 2200 and 2200HP -** 2200lbs @ 15 ft or 1500 lbs @ 20 ft
- **MAX Megatron 2200 PLUS and 2200HP PLUS -** 2500lbs @ 15 ft or 1800 lbs @ 20 ft
- **MAX Megatron FAST -** 1200lbs @ 12 ft gate per operator
- **MAX Megatron FAST PLUS -** 1600lbs @ 12 ft gate per operator

NOTE: The MAX Megatron FAST and FAST PLUS are **ONLY** available for installation on bi-parting gates (dual operators). A single gate operator **CANNOT** be used.

90° Opening Time:

- **MAX Megatron 1400/1400HP/2200/2200HP/2200 PLUS/2200HP PLUS -** 16 selectable speeds from approximately 11.5 sec to 20 sec depending on the weight and length of the gate.
- **MAX Megatron FAST and FAST PLUS -** 16 selectable speeds from approximately 6 sec to 14 sec depending on the weight and length of the dual gates.

Entrapment Protection:

- UL 325 Type A Inherent (ERD sensor)
- Inputs for **NORMALLY CLOSED (N.C.)** UL 325 Type B1 (photo cell) and Type B2 (sensing edge)

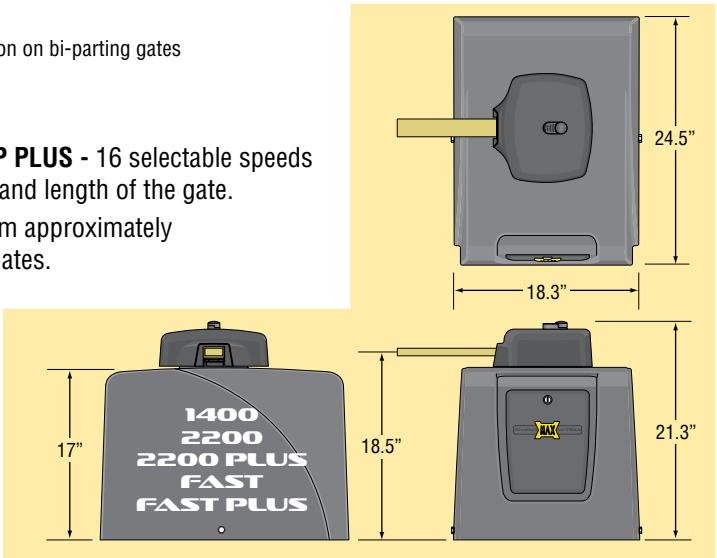

Quick Install Guide for MAX Megatron

MAXIMUM MAX CONTROLS
www.max.us.com

For detailed installation instructions and COMPLETE information about ALL the available options & features for the MAX Megatron, please refer to the MAX Megatron Installation and Owners manual.

1 OPERATOR PLACEMENT

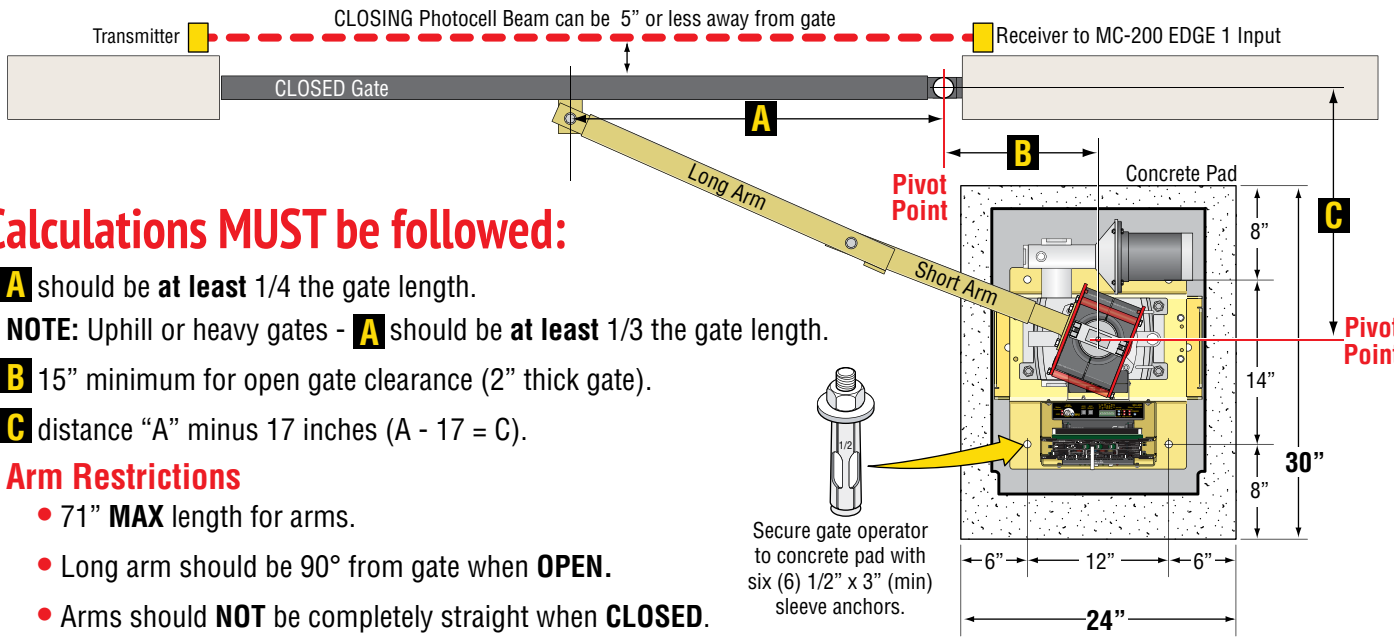

Calculations MUST be followed:

A should be **at least** 1/4 the gate length.

NOTE: Uphill or heavy gates - **A** should be **at least** 1/3 the gate length.

B 15" minimum for open gate clearance (2" thick gate).

C distance "A" minus 17 inches (A - 17 = C).

Arm Restrictions

- 71" **MAX** length for arms.
- Long arm should be 90° from gate when **OPEN.**
- Arms should **NOT** be completely straight when **CLOSED**.

See 2 ARM POSITION on next page.

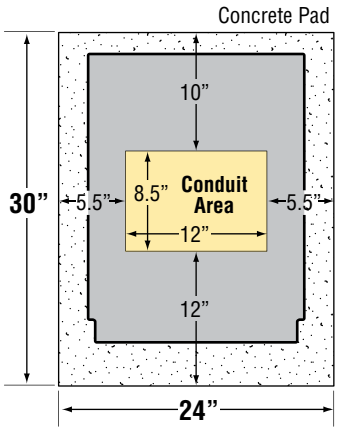

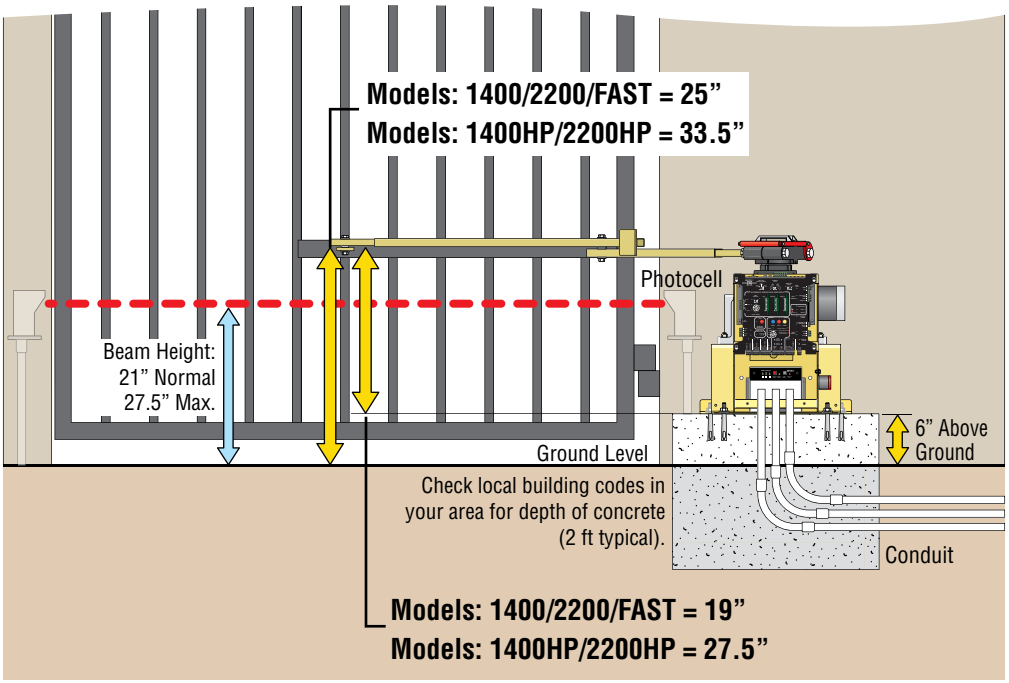

UL 325 2016 Standard

ONE Entrapment protection sensor **MUST** installed or operator will **NOT** function. It **MUST** be **MONITORED** and **NORMALLY CLOSED (N.C.).**

2 ARM POSITION

Install arms using these guidlines:

Arm in OPEN Position

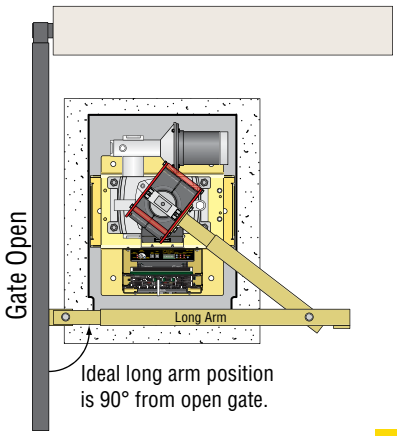

Arm in CLOSE Position

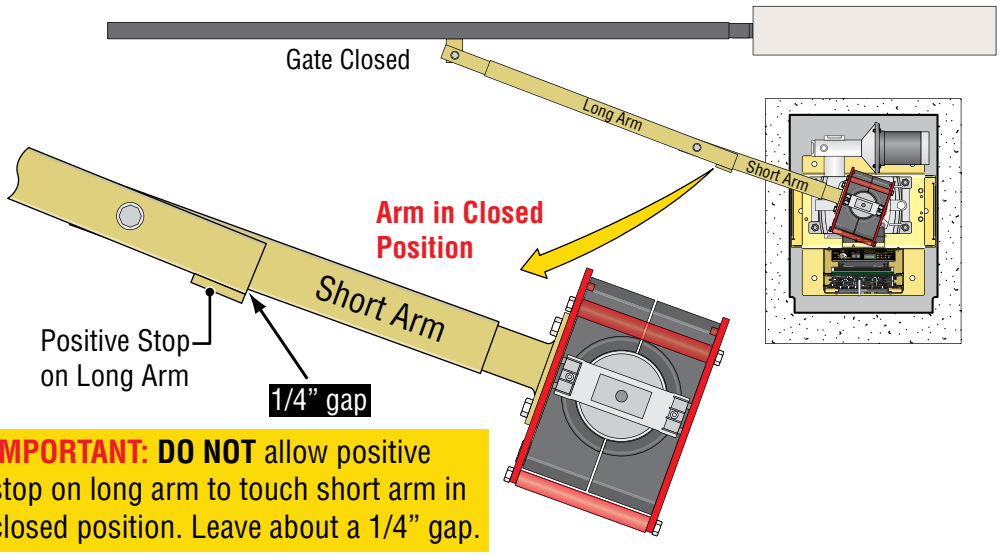

IMPORTANT: DO NOT allow positive stop on long arm to touch short arm in closed position. Leave about a 1/4" gap.

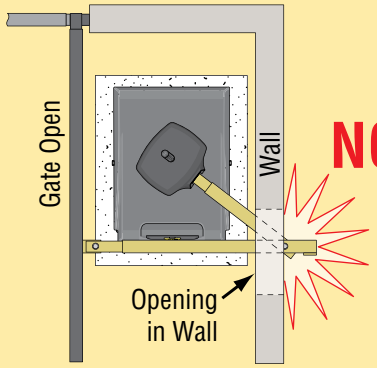

NEVER install the arm so arm protrudes through an opening in the open position.

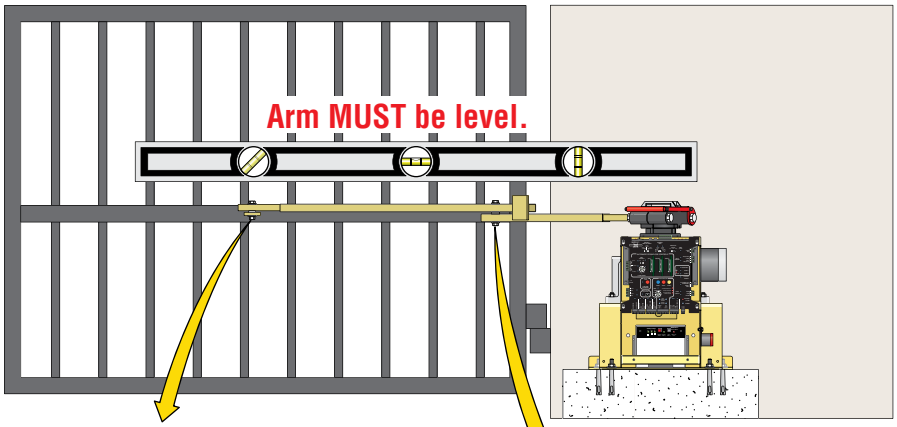

Gate Bracket Assembly

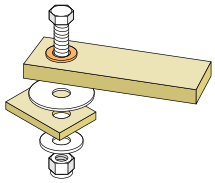

DO NOT over tighten bolt

Arm Elbow Assembly

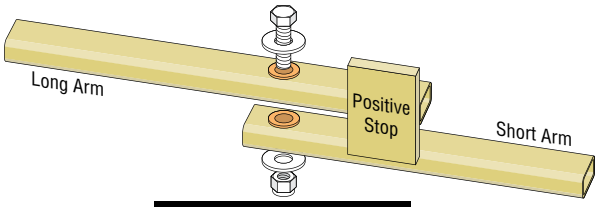

DO NOT over tighten bolt

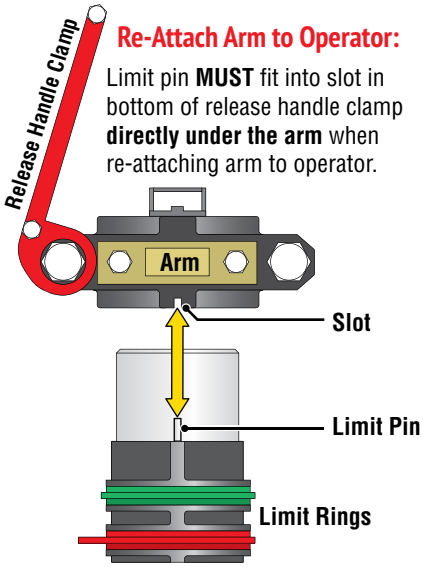

Re-Attach Arm to Operator:

Limit pin **MUST** fit into slot in bottom of release handle clamp **directly under the arm** when re-attaching arm to operator.

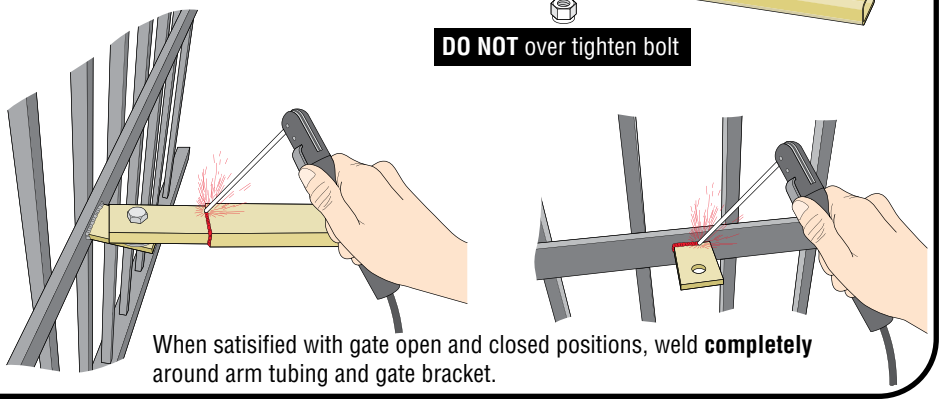

When satisified with gate open and closed positions, weld **completely** around arm tubing and gate bracket.

3 RELEASE HANDLE CLAMP

IMPORTANT: Handle **MUST** be **HORIZONTAL** when **FIRMLY** in secure position.

YES

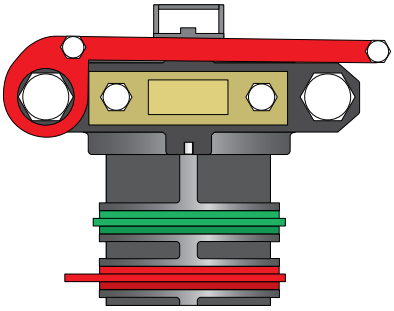

NO

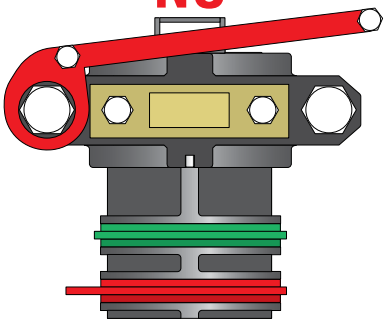

Adjustment:

IMPORTANT: Tighten the adjustment bolt until **NO SLIPPAGE** occurs when handle is in the **SECURE HORIZONTAL** position.

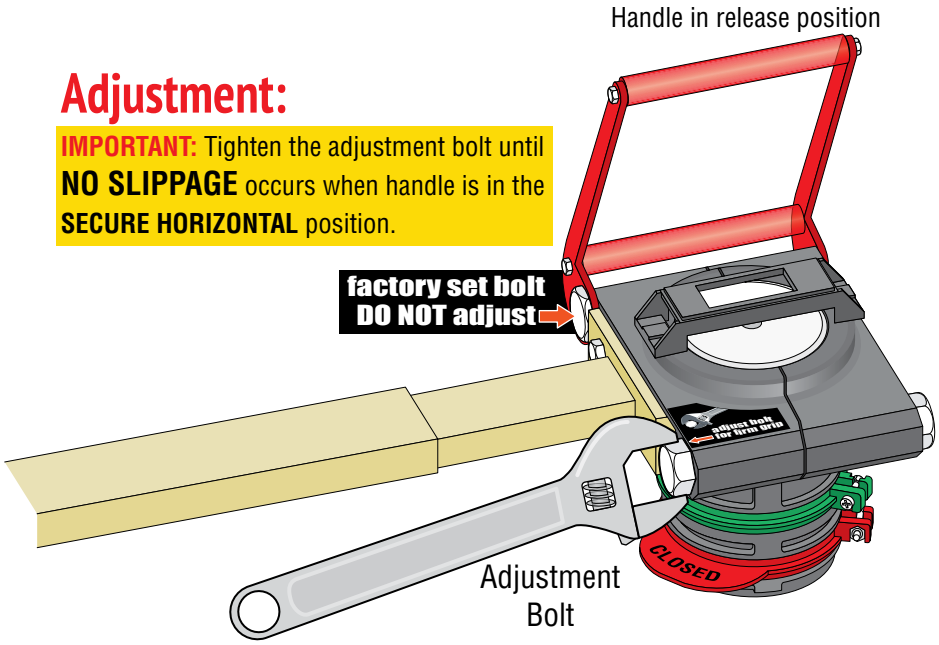

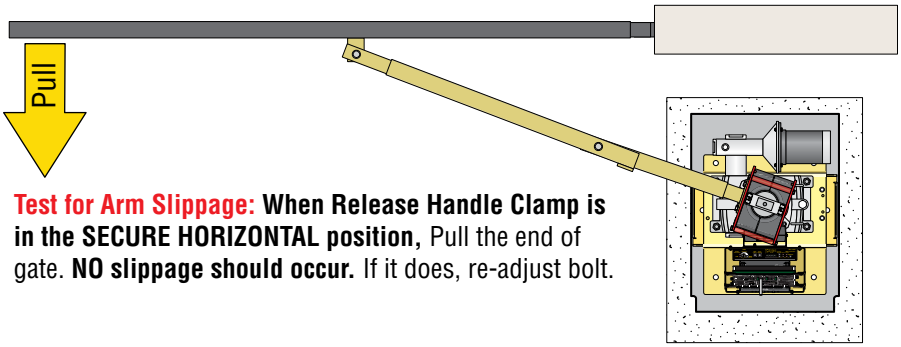

Test for Arm Slippage: When Release Handle Clamp is in the SECURE HORIZONTAL position, Pull the end of gate. **NO slippage should occur.** If it does, re-adjust bolt.

IMPORTANT: The arm **MUST NOT** slip when the gate is cycling or the gate **OPEN** and **CLOSE** limit positions will **NOT** be **LEARNED**. Gate speed will remain slow if gate positions are **NOT** learned.

Re-Attach Arm to Operator:

Limit pin **MUST** fit into slot in bottom of release handle clamp **directly under the arm** when re-attaching arm to operator.

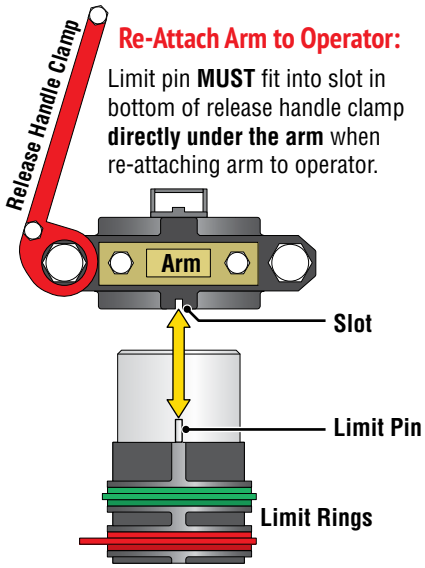

NOTE: Limit rings that have been previously set will **automatically** re-align the gate's open and close position after release handle clamp has been re-attached and secured. **No re-adjustment is necessary**.

4 AC INPUT POWER

Wire input AC power wire to the **MAX Megatron Toroid box**.

Choose either **115V** or **230V** setting on input AC power selector switch.

CAUTION: Make sure circuit breaker is OFF from incoming AC input wire BEFORE wiring!

CAUTION: If power selector switch is set for **115V** but input power is actually **230 V**, 7 Amp Fuse will blow.

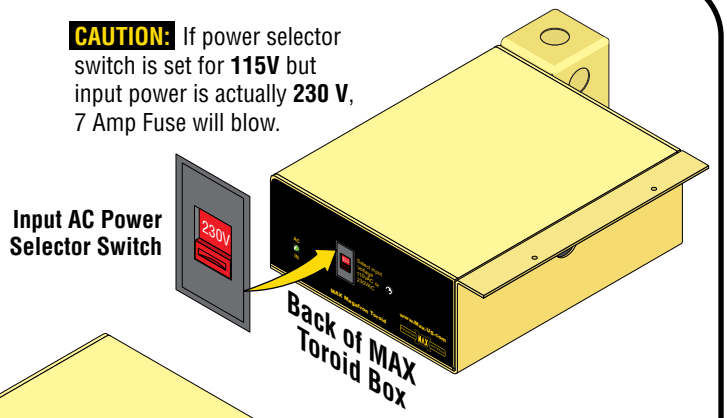

Input AC Power Options

Single Phase 115VAC Only

115VAC

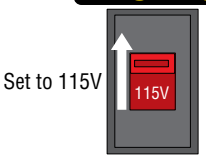

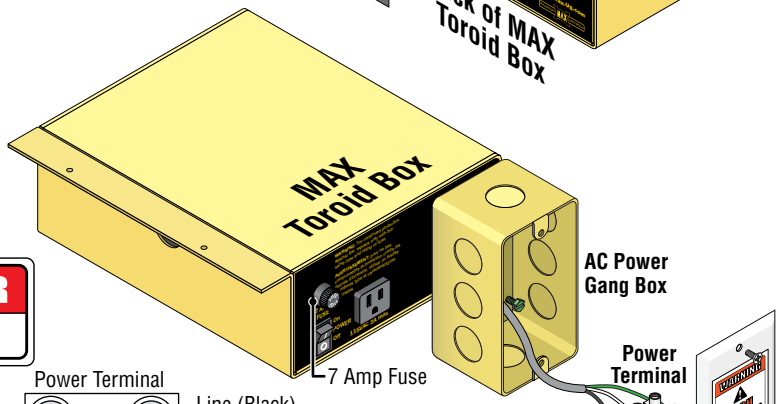

DANGER
HIGH VOLTAGE!

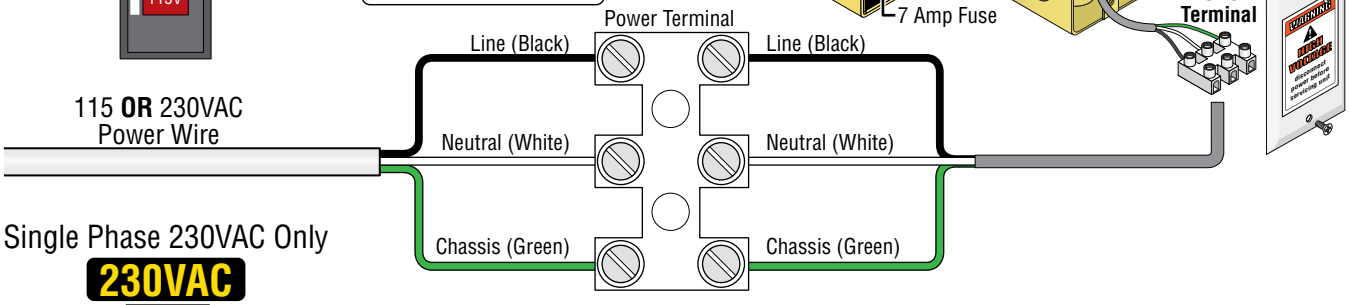

Single Phase 230VAC Only

230VAC

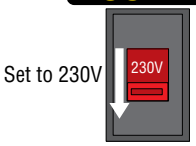

IMPORTANT: Make sure there are **NO** exposed bare wires at the power terminal connection.

Turn Power ON

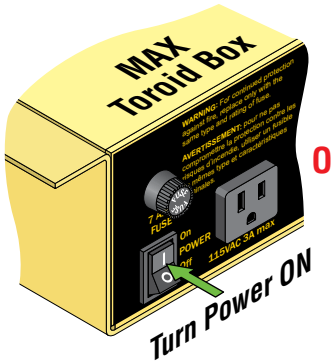

DO NOT CYCLE OPERATOR!

LEDs should light up on operator.
Battery power **automatically** turns **ON**.

Turn ALL Power OFF

1. Turn OFF **POWER Switch** on **MAX Toroid Box.** Battery power will **remain ON**.
2. **WAIT** for 15 seconds.
3. **Press and HOLD** (approx. 5 seconds) the **RED ON/OFF BATTERY** button until MAX BC-7 LEDs turn **ON**, then release button. LEDs will turn **OFF**. (Up to 30 sec.)

IMPORTANT: This procedure must be followed whenever **ALL** power must be turned **OFF** on operator.

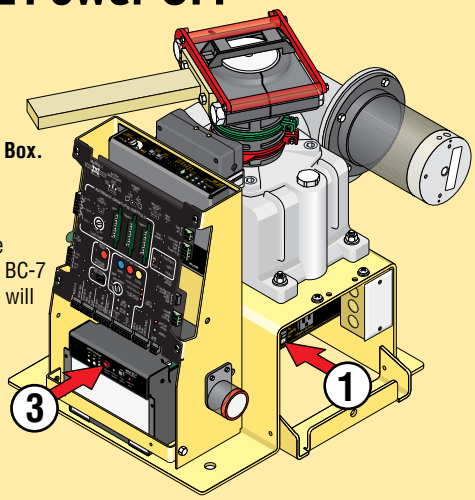

5 GROUND OPERATOR

Operator MUST be Properly GROUNDED

IMPORTANT: Operator MUST be grounded in lightning prone areas or warranty will be **VOIDED!**

WARNING
connect chassis to ground rod for lightning protection

Proper grounding of this gate operator is a requirement for LIGHTNING PROTECTION in lightning prone areas. To be effective, ground connections should be made with a **minimum 12 AWG, 600 volt** insulated wire to a ground point within **3 feet of the gate operator**. The ground point must be at an **electrical panel**, a **metallic cold water pipe** that runs in the earth, or a **grounding rod**.

NOTE: Consult city codes for AC line wiring.
Beware of existing underground services.

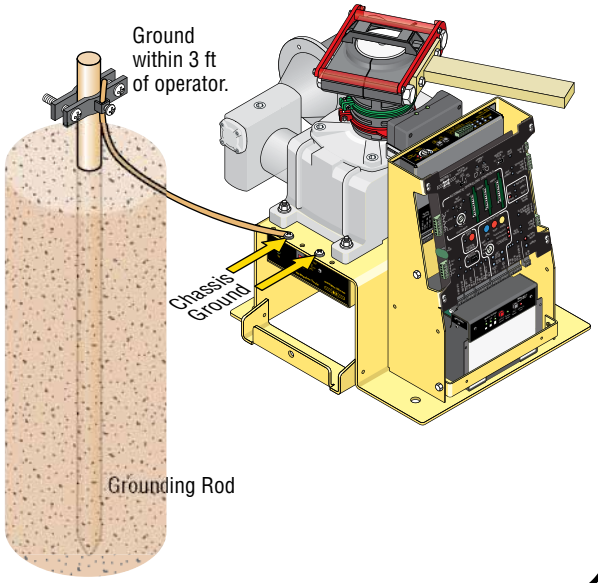

6 SET OPENING DIRECTION AND ID PLUG

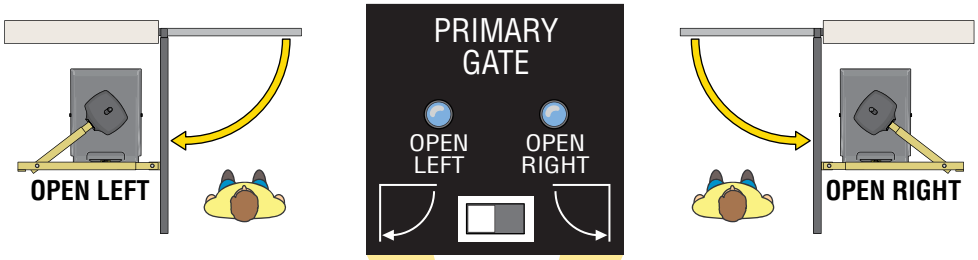

Set the desired opening direction.

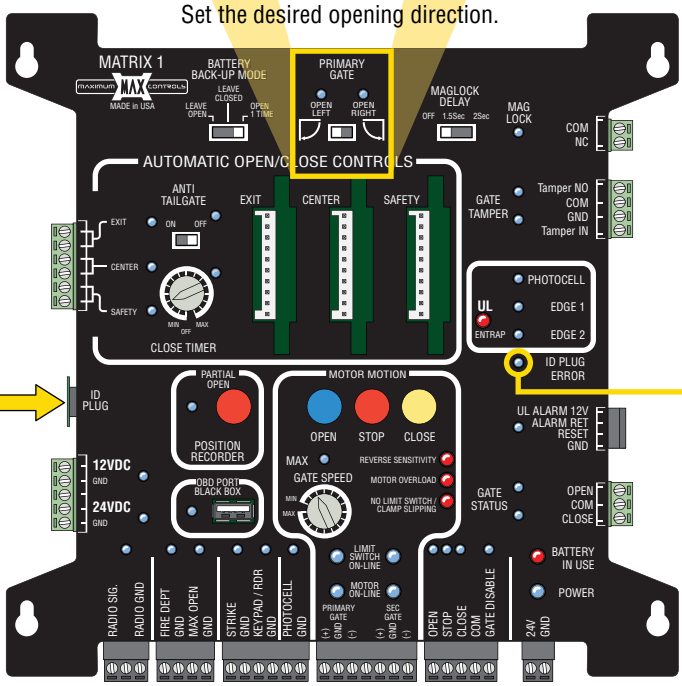

ID plug **MUST** be plugged in.

Dual Gate Operators NOTE: Secondary operator will **automatically** be set to the opposite opening direction as the primary gate operator.

ID Plug Error: If ID plug is **NOT** plugged in, board will constantly beep and operator will **NOT** function.

NOTE: See manual for more information about Matrix 1 settings.

7 LIMIT SWITCH ADJUSTMENT

The limit rings need to be set **BEFORE** the gate can be cycled or **DAMAGE** could occur.

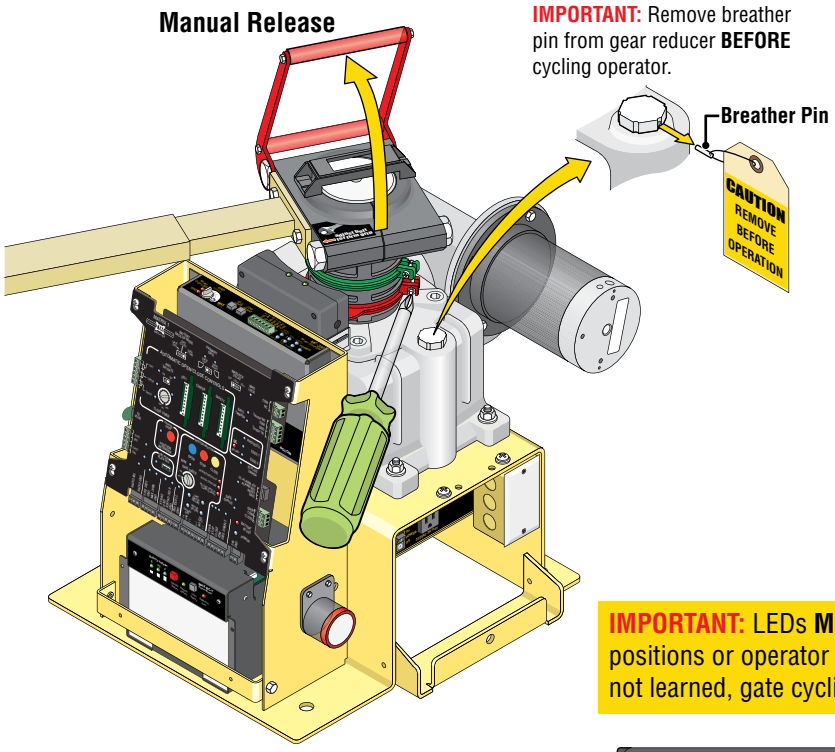

Adjust Limit Switches:

Make sure power is ON. Manually Release Arm.

1. Move gate to **CLOSED** position.
2. Loosen closed limit ring screw.
3. Rotate closed limit ring until closed LED lights.
4. **TIGHTEN CLOSED limit ring screw leaving NO gap.**
5. Move gate to **OPEN** position.
6. Loosen open limit ring screw.
7. Rotate open limit ring until open LED lights.
8. **TIGHTEN OPEN limit ring screw leaving NO gap.**

IMPORTANT: Manually Secure Arm

IMPORTANT: LEDs **MUST** light up when gate reaches **OPEN** and **CLOSE** positions or operator **WILL NOT** learn gate positions. If gate positions are not learned, gate cycling speed will **remain SLOW** during normal operation.

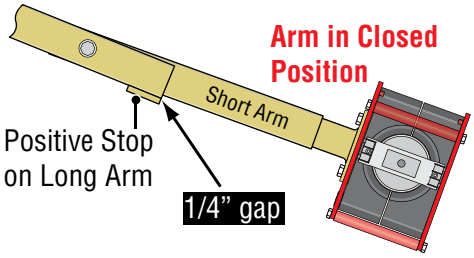

IMPORTANT: DO NOT allow positive stop on long arm to touch short arm in closed position. Leave about a **1/4" gap**.

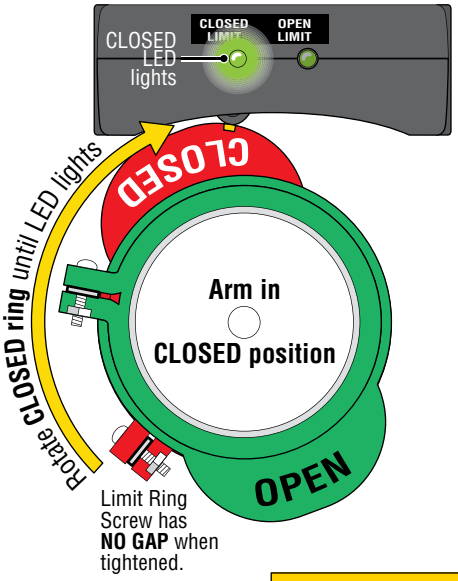

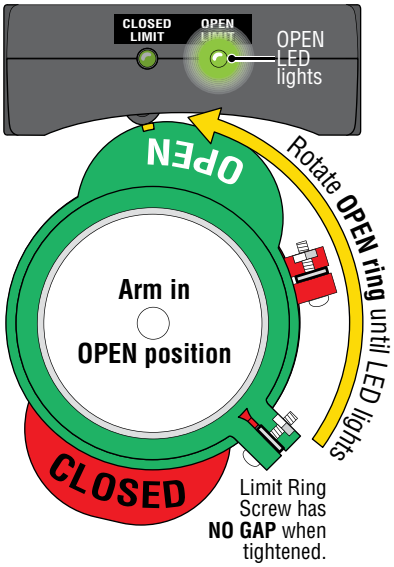

"Fine Tune" Limit Rings Adjustment

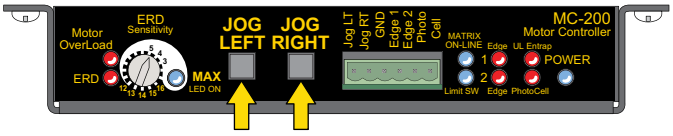

Push and **HOLD** the **JOG LEFT** or **JOG RIGHT** buttons accordingly on the **MAX MC-200 motor controller** to move the gate (release the button to stop gate). Re-adjust limit ring postions as desired.

CAUTION

Make sure OPEN/CLOSE limit rings are tightened after adjustment or slippage could occur.

8 ENTRAPMENT PROTECTION WIRING

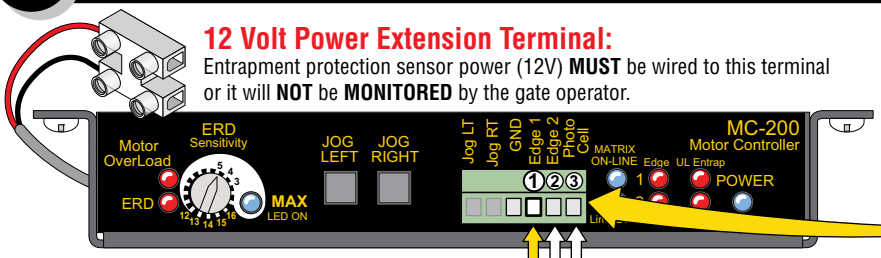

12 Volt Power Extension Terminal:

Entrapment protection sensor power (12V) **MUST** be wired to this terminal or it will **NOT** be **MONITORED** by the gate operator.

EDGE 1: MONITORED CLOSE ONLY

Edge 2: LEARNED MONITORED OPEN/CLOSE

Photo Cell: LEARNED MONITORED OPEN/CLOSE

NOTE: See manual for more information about learned monitored inputs.

Jumper UNUSED Entrapment Protection Inputs or a fault will occur.

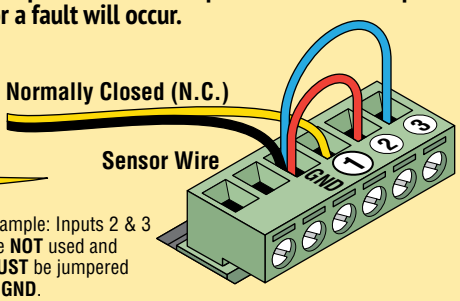

Example: Inputs 2 & 3 are **NOT** used and **MUST** be jumpered to **GND**.

UL 325 2016 Standard

ONE Entrapment protection sensor **MUST** installed or operator will **NOT** function. It **MUST** be **MONITORED** and **NORMALLY CLOSED (N.C.).**

Typical Wiring For:

Normally Closed (N.C.) Photo Cell to EDGE 1

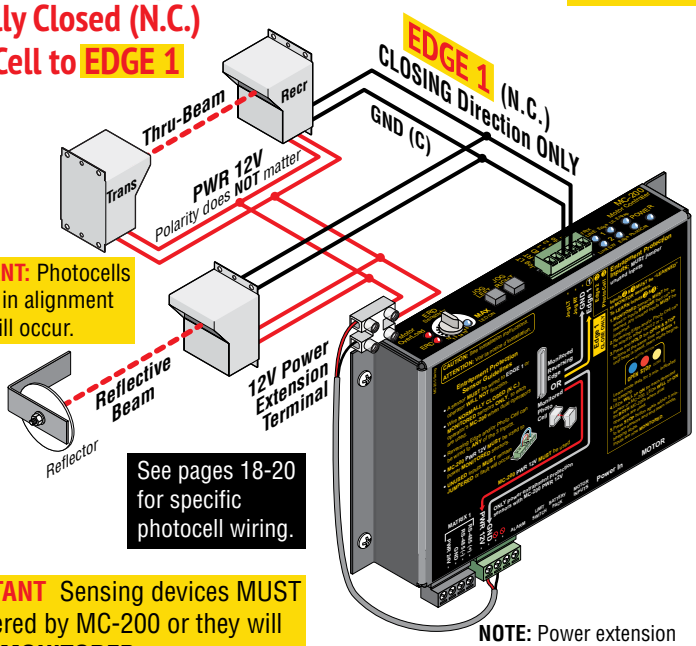

IMPORTANT: Photocells **MUST** be in alignment or fault will occur.

See pages 18-20 for specific photocell wiring.

IMPORTANT Sensing devices MUST be powered by MC-200 or they will **NOT** be **MONITORED**.

NOTE: Power extension terminal is connected to 12V power on back of MC-200.

GEM-104 MUST be used

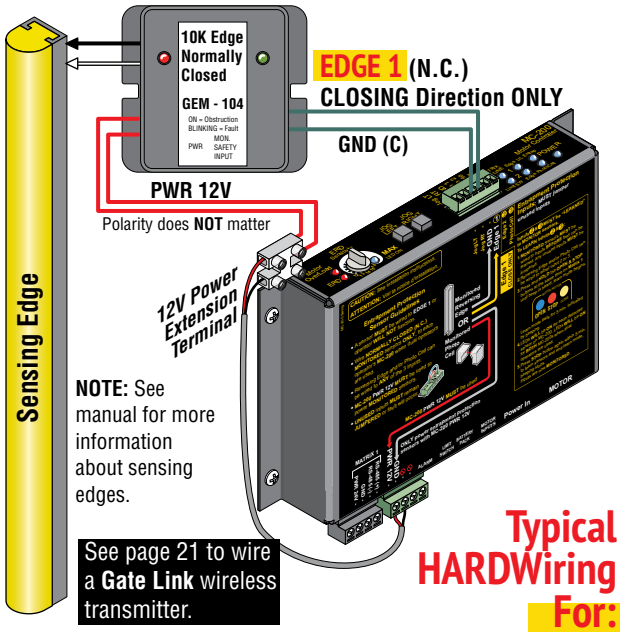

NOTE: See manual for more information about sensing edges.

See page 21 to wire a **Gate Link** wireless transmitter.

Typical HARDWiring For:

Normally Closed (N.C.) Sensing Edge to EDGE 1

Entrapment Protection Device Locations:

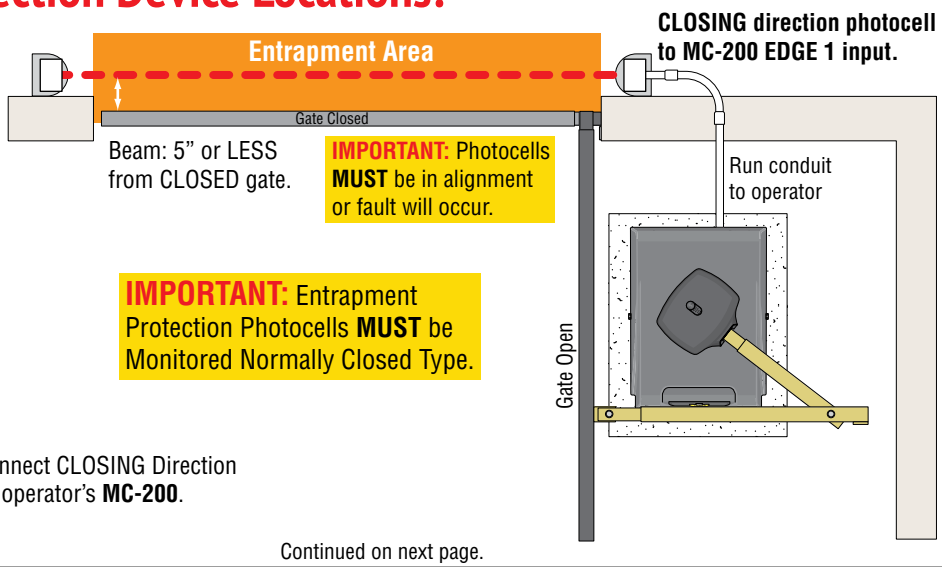

CLOSING direction photocell to MC-200 EDGE 1 input.

Beam: 5" or LESS from CLOSED gate.

IMPORTANT: Photocells **MUST** be in alignment or fault will occur.

Run conduit to operator

CLOSING Direction Photocell ONLY

IMPORTANT: Entrapment Protection Photocells **MUST** be Monitored Normally Closed Type.

Dual Gate Operators NOTE: Connect CLOSING Direction photocell to the **PRIMARY** gate operator's **MC-200**.

Continued on next page.

8 CONTINUED

Entrapment Protection Device Options and Locations:

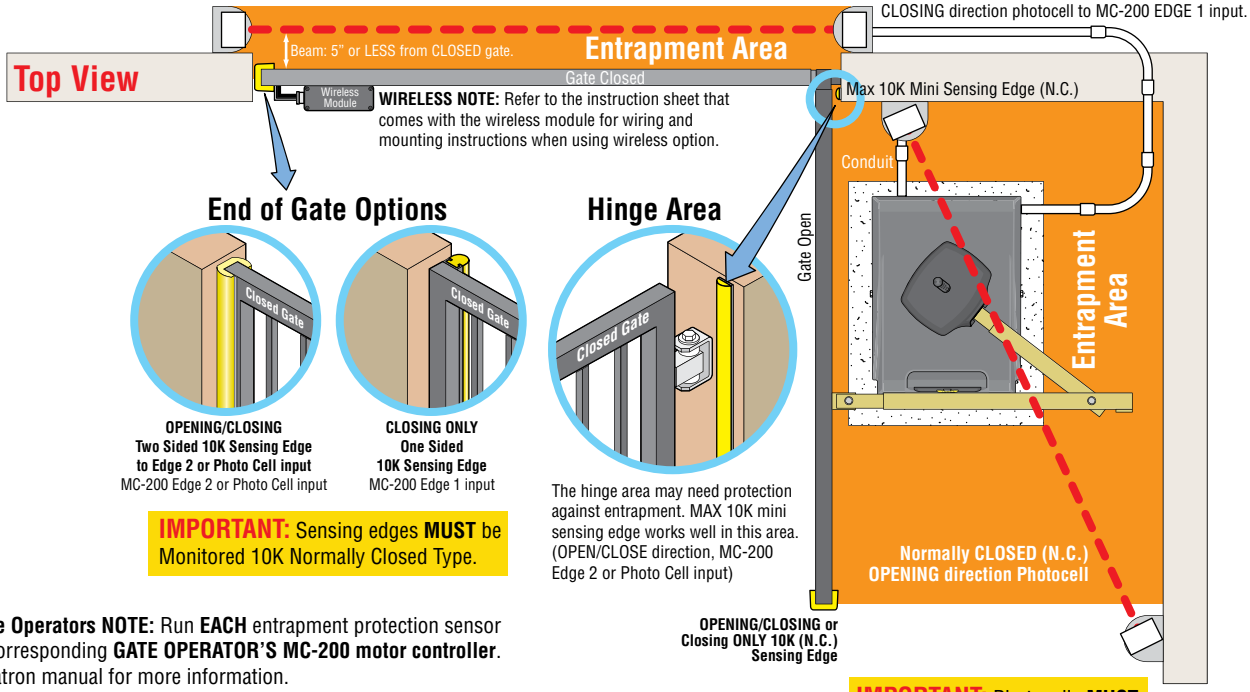

IMPORTANT: Sensing edges **MUST** be Monitored 10K Normally Closed Type.

Dual Gate Operators NOTE: Run **EACH** entrapment protection sensor to each corresponding **GATE OPERATOR'S MC-200 motor controller**. See Megatron manual for more information.

IMPORTANT: Photocells **MUST** be in alignment or fault will occur.

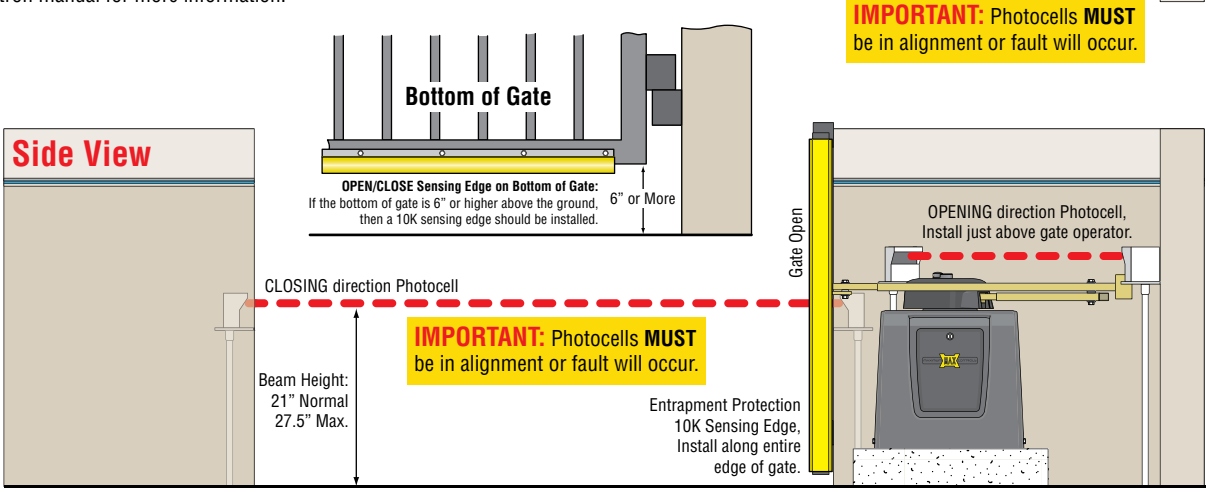

IMPORTANT: Photocells **MUST** be in alignment or fault will occur.

9 LEARN GATE POSITIONS

After the **OPEN** and **CLOSED** limit rings have been set, the arm is **SECURE** and at least **ONE** entrapment sensor has been installed, put the gate in the **CLOSED** position:

1. Push **OPEN** button to cycle gate to open position. Operator cycles slowly while learning position.

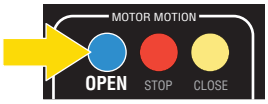

Matrix 1

2. Then push **CLOSE** button to cycle gate to closed position. Operator cycles slowly while learning position.

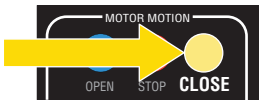

Matrix 1

Matrix 1

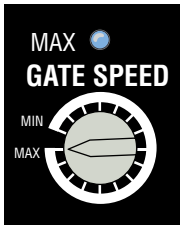

Set to MAX

After gate positions have been learned, the gate will cycle at the speed set on matrix 1 **"GATE SPEED"** setting.

10 ADJUST ERD REVERSE SENSOR

The **ERD Sensor - Electronic Reversing Device** (Type A) **MUST** be adjusted for the **OPEN and CLOSE gate cycles**.

When the gate encounters an obstruction during the **CLOSE** cycle, it will reverse to the open position and **PAUSE** the gate. An input command (press remote button or exit loop) is needed **BEFORE** the gate will reset and close again.

When the gate encounters an obstruction during the **OPEN** cycle, it will reverse approximately 6 inches and **PAUSE** the gate. An input command (press remote button or exit loop) is needed **BEFORE** the gate will reset and open again.

For the **ERD Sensitivity** to function correctly:

- **THE RELEASE HANDLE CLAMP MUST NOT SLIP** when the gate encounters an obstruction.
- Limit switches must be learned **BEFORE** adjusting the ERD Sensitivity.

16 sensitivity setting positions.
NO mechanical hard stop for knob.

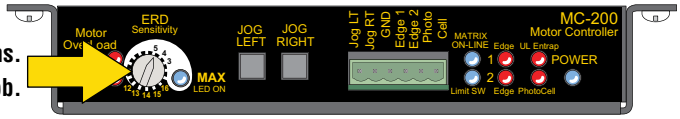

Typical Settings:

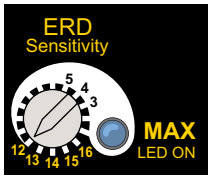

Position 12:
- Typical gate setting.

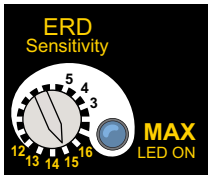

Position 15:
- Heavy gate setting.
- Long gate setting.

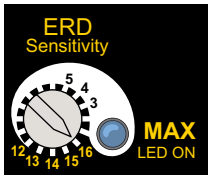

Position 16:
- Uphill gate setting.
- High wind area gate setting.

CAUTION: Position 16 results in gate exerting **MAXIMUM force** before reversing direction.

IMPORTANT: When satisfied with ERD adjustment, cycle the gate 3 or 4 times to make sure that the ERD sensor does not **falsely trigger** during normal gate operation. Re-adjust if this happens.

Adjusting ERD:

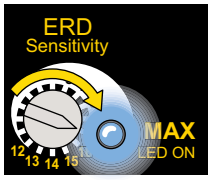

A. Turn knob until blue LED lights up. Maximum sensitivity reached, **Position 1** - Too sensitive for most gates.

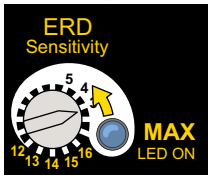

B. Turn knob **counter-clockwise** to reduce gate sensitivity while testing ERD until desired results is attained. (LED remains OFF for all but position 1)

If alarm sounds while adjusting ERD, press **STOP BUTTON** on Matrix 1 to shut-off alarm.

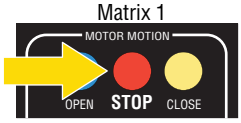

11 LOOPS & LOOP DETECTORS

In-Ground Loops Connections

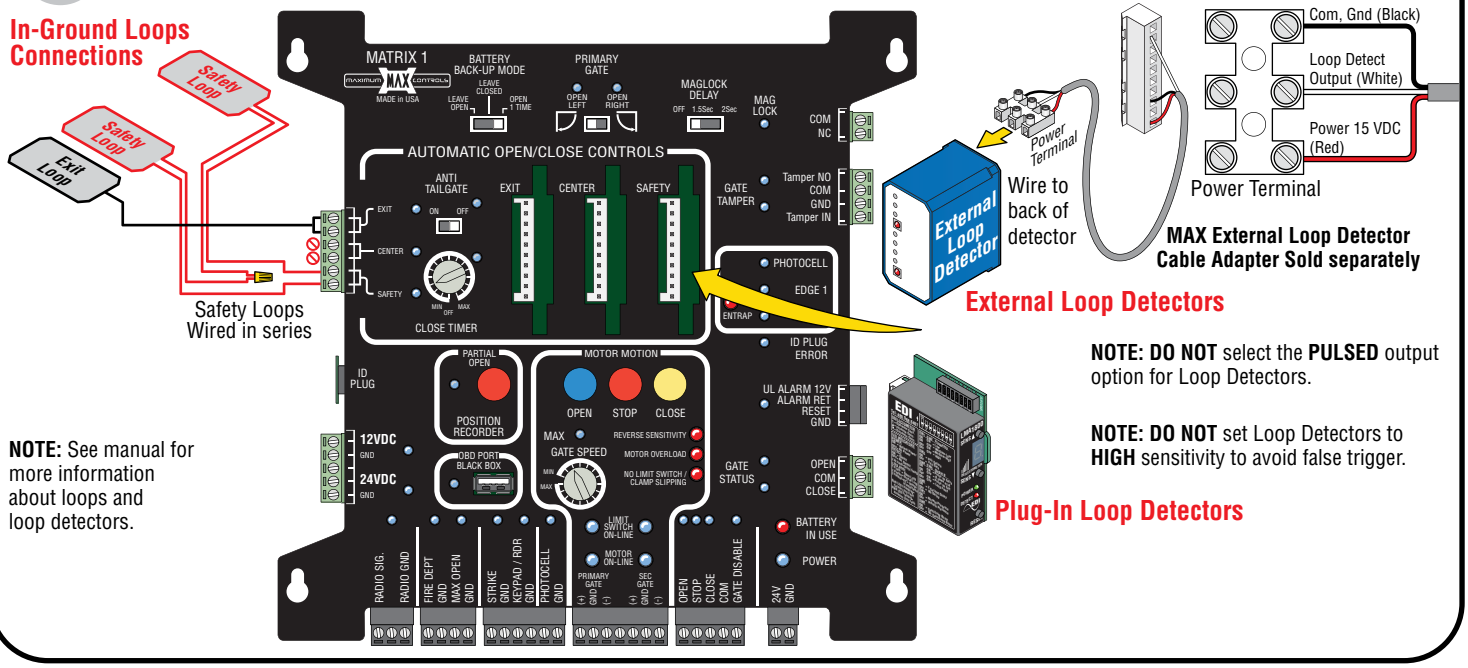

NOTE: See manual for more information about loops and loop detectors.

NOTE: DO NOT select the **PULSED** output option for Loop Detectors.

NOTE: DO NOT set Loop Detectors to **HIGH** sensitivity to avoid false trigger.

12 MATRIX 1 SETTINGS

Battery Back-Up Mode

LEAVE OPEN - After a power failure and battery power is drained, the next open command, gate will remain **OPEN**. Gate will **automatically** close after AC power is restored if timer is ON.

LEAVE CLOSED - After a power failure and battery power is drained, gate will remain **CLOSED.** See manual for more information about opening a **CLOSED** gate during a power failure (emergency open device, manual open, etc).

OPEN 1 TIME - After a power failure, gate **automatically OPENS** and **REMAINS OPEN.** When power is restored, gate will **automatically** close.

Anti Tailgate

Set to OFF

See manual before enabling this feature.

Close Timer

1st click clockwise - Knob at MIN position: 1/2 sec...
2nd click clockwise: 1 sec...
3rd click: 4 sec...
4th click: 8 sec... etc up to 60 sec. MAX.
See manual for more info.

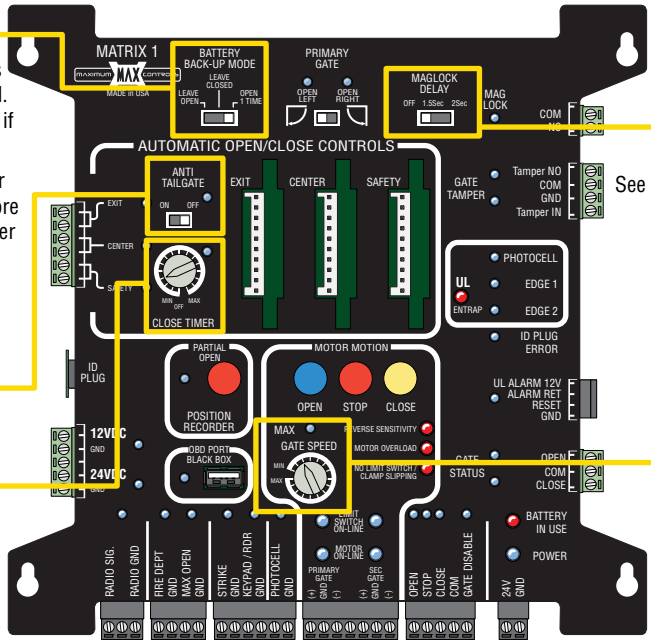

Maglock Delay

Set to OFF

See manual before enabling this feature.

Gate Speed

Set to MAX

See manual for more info.

13 WIRING OPENING DEVICE OPTIONS

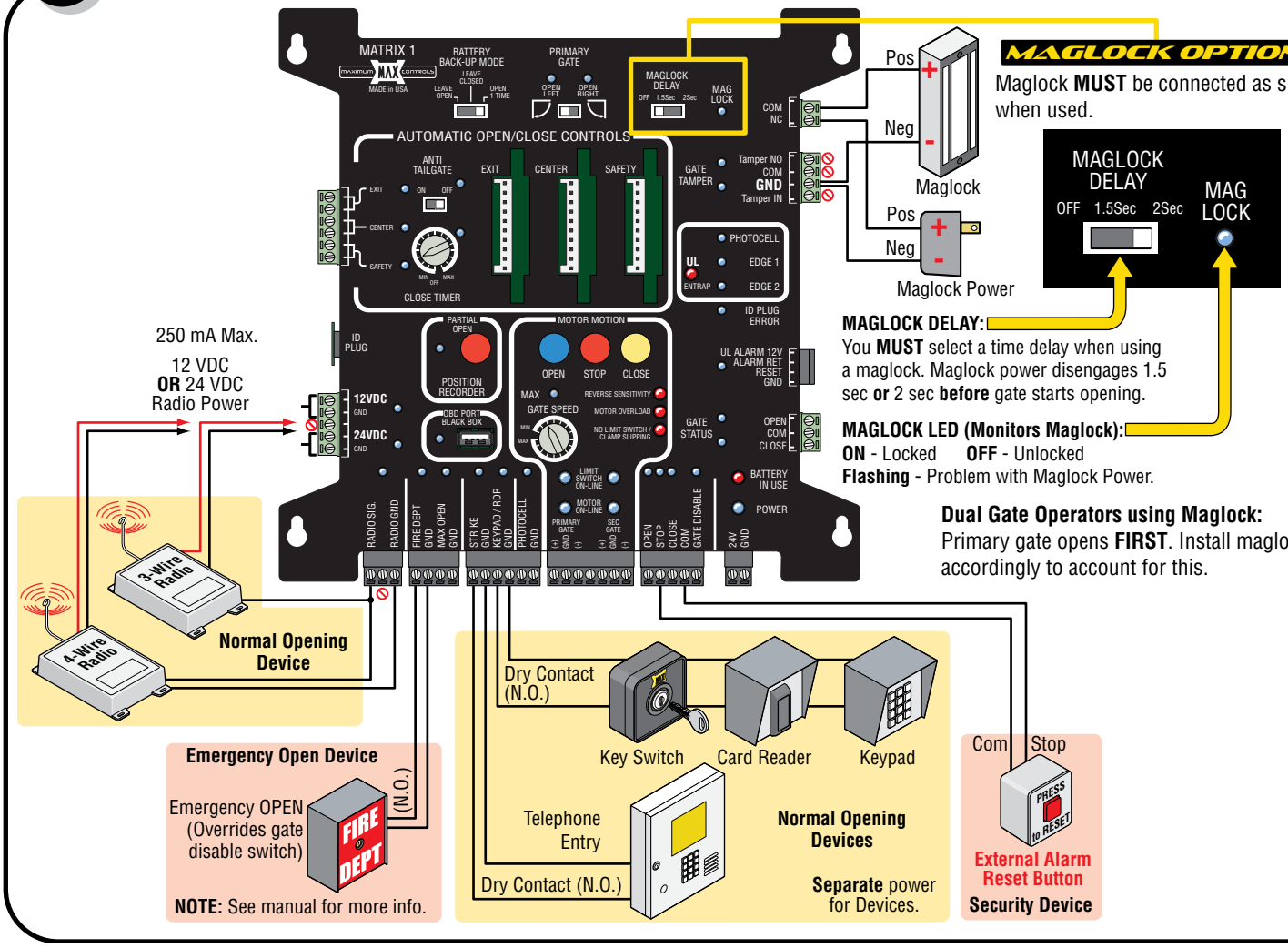

DUAL GATE OPERATORS

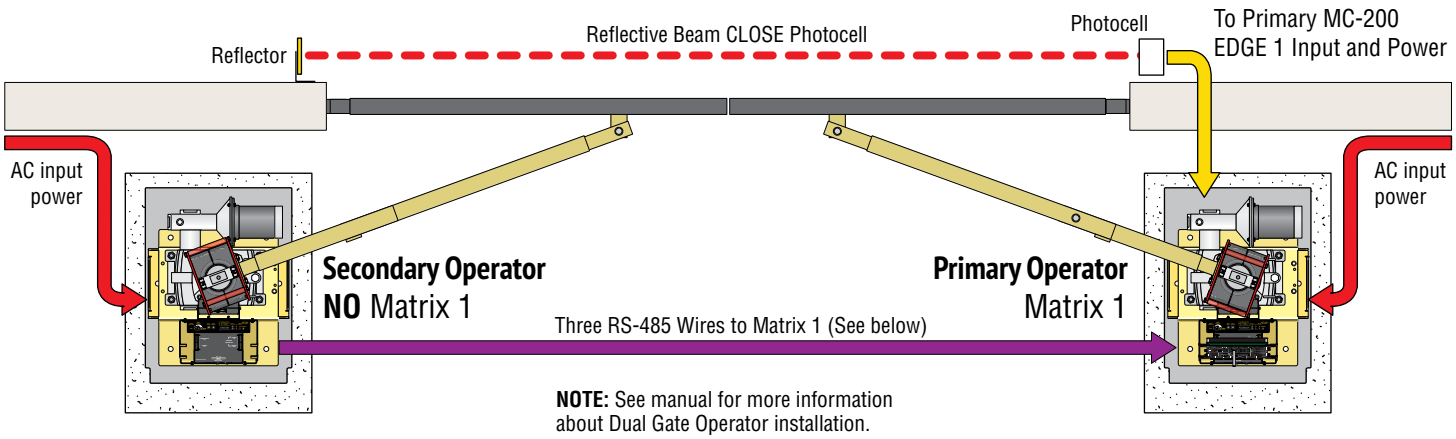

NOTE: See manual for more information about Dual Gate Operator installation.

Jumper **ALL** Entrapment Protection Inputs to **GND** on **Secondary** MC-200 when **ONLY** using **CLOSE** photocell.

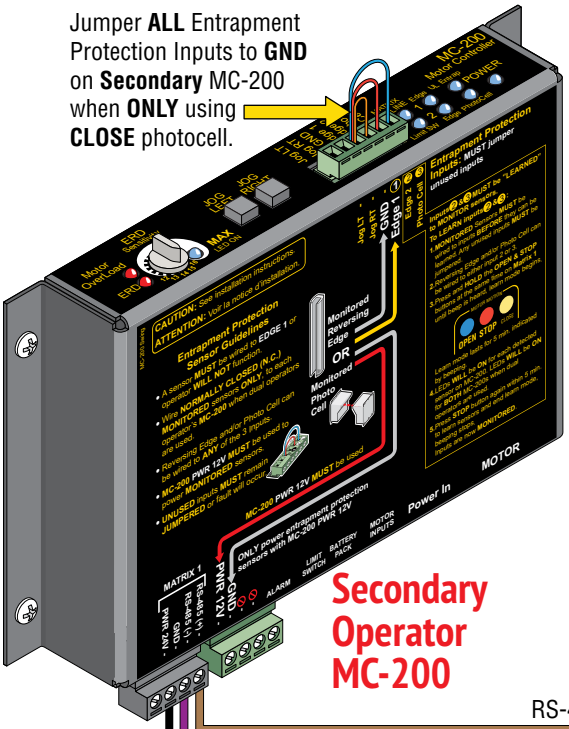

Secondary Operator MC-200

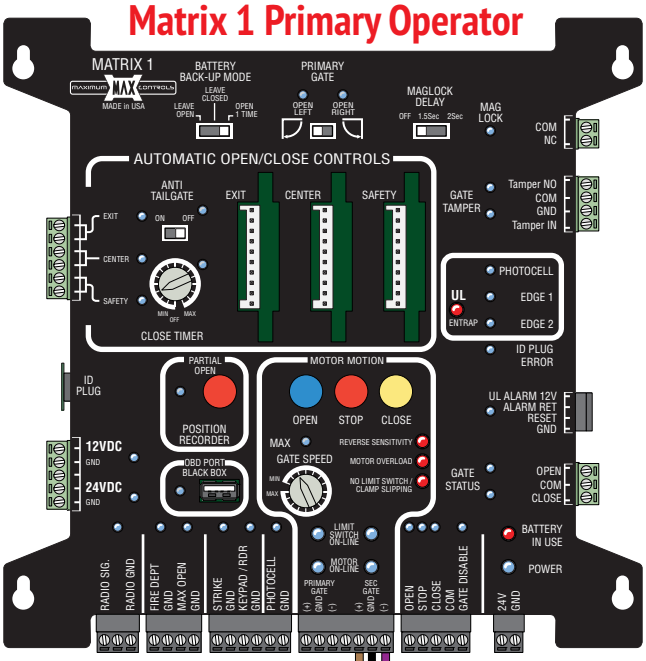

SEC GATE

RS-485 (+) to RS-485 (+)

RS-485 (-) to RS-485 (-)

RS-485 GND to RS-485 GND

- AC input power to **EACH** gate operator.
- Entrapment protection (**CLOSE** photocell) to **PRIMARY GATE OPERATOR MC-200**.
  - Jumper any **UNUSED** entrapment protection inputs to GND on **BOTH** MC-200s or a fault will occur.
  - See manual if installing more entrapment protection devices than just a **CLOSE** photocell.
- Opening device to the **PRIMARY GATE OPERATOR**.
- Matrix 1 **Open Left - Open Right** set for the **PRIMARY GATE OPERATOR** opening direction. (Secondary operator automatically set to opposite opening direction)
- **OPTIONAL -** In-ground loop wires to the **PRIMARY GATE OPERATOR**.

NOTE: The Alarm Shut-Off is located on the **Primary** gate operator **ONLY**. There is **NO** alarm shut-off button on the secondary gate operator.

Alarm Shut-OFF

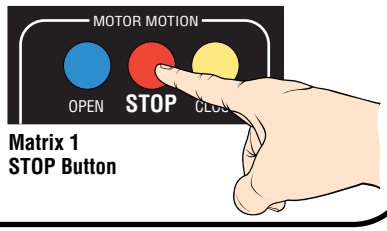

Matrix 1 STOP Button

Troubleshooting for MAX Megatron

www.max.us.com

This page and the next 5 pages can help troubleshoot problems that might occur after installation is complete.

USB BLACK BOX PORT

Download a simple .txt file to troubleshoot gate operator errors and view event history.

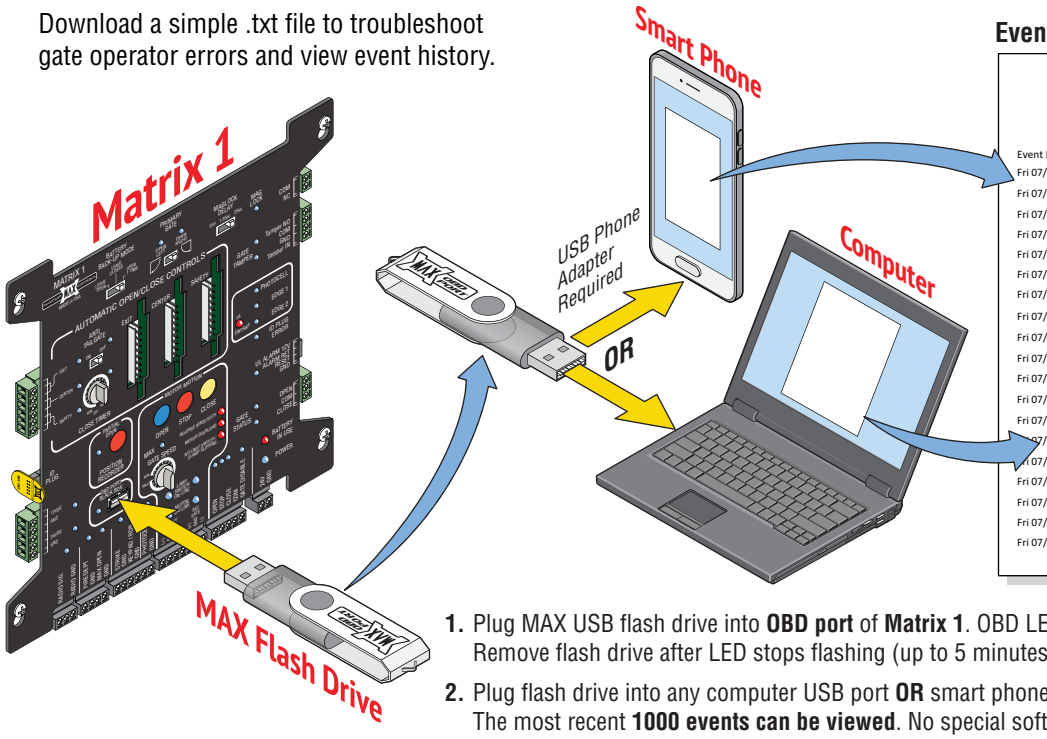

Event History Text Document Sample

Event type clarification:

INFO: informational message only
WARNING: unusual event but doesn't cause system malfunction
ERROR: abnormal event, could cause system malfunction
ENTRAP: entrapment detection event

Event Report:

Fri 07/11/2014 10:59:41	INFO : Cycle Counter
Fri 07/11/2014 10:59:41	ENTRAP : SEC_MC: First ERD Detected
Fri 07/11/2014 10:59:37	INFO : Radio Input Deactivated
Fri 07/11/2014 10:59:36	INFO : Radio Input Activated
Fri 07/11/2014 10:58:54	INFO : PRI_MC: Fully Open Position Learned
Fri 07/11/2014 10:58:53	INFO : SEC_MC: Fully Open Position Learned
Fri 07/11/2014 10:57:40	INFO : PRI_CIO: Communication Established
Fri 07/11/2014 10:57:38	ENTRAP : PRI_MC: Photo Cell Deactivated
Fri 07/11/2014 10:57:34	ENTRAP : PRI_MC: Photo Cell Activated
Fri 07/11/2014 10:57:21	INFO : Radio Input Deactivated
Fri 07/11/2014 10:57:21	INFO : Radio Input Activated
Fri 07/11/2014 10:56:46	WARNING: PRI_MC: Tamper Reported
Fri 07/11/2014 10:56:36	INFO : SEC_MC: Fully Open Position Unknown
07/11/2014 10:56:36	INFO : PRI_MC: Fully Open Position Unknown
11/2014 10:56:36	WARNING: PRI_MC: Tamper Reported
Fri 07/11/2014 10:56:33	ENTRAP : PRI_MC: Photo Cell Deactivated
Fri 07/11/2014 10:56:33	ENTRAP : PRI_MC: Photo Cell Activated
Fri 07/11/2014 10:56:33	ENTRAP : PRI_MC: Photo Cell Deactivated
Fri 07/11/2014 10:56:33	ENTRAP : PRI_MC: Photo Cell Activated

1. Plug MAX USB flash drive into **OBD port** of **Matrix 1**. OBD LED will flash while file is downloading. Remove flash drive after LED stops flashing (up to 5 minutes to download).
2. Plug flash drive into any computer USB port **OR** smart phone using a USB phone adapter. The most recent **1000 events can be viewed**. No special software required.

TEST EDGE 1 ENTRAPMENT SENSOR

Troubleshoot **EDGE 1** entrapment protection sensor:

1. Press and **HOLD** the **STOP button & then the OPEN** button together on Matrix 1 until beeping is heard, learn mode begins.

   NOTE: DO NOT press the **OPEN** button before the **STOP** button or learn mode will **NOT** function.

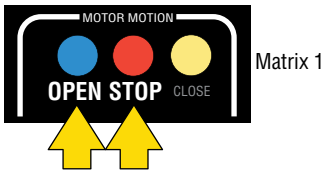

2. **EDGE 1** LED should be **ON** MC-200 if an entrapment sensor is detected.
   If **EDGE 1** LED is **NOT** on, wiring to photocell is bad, photocell is out of alignment, photocell is wired wrong, photocell is bad, or sensor is **NOT** normally closed (N.C.), etc.

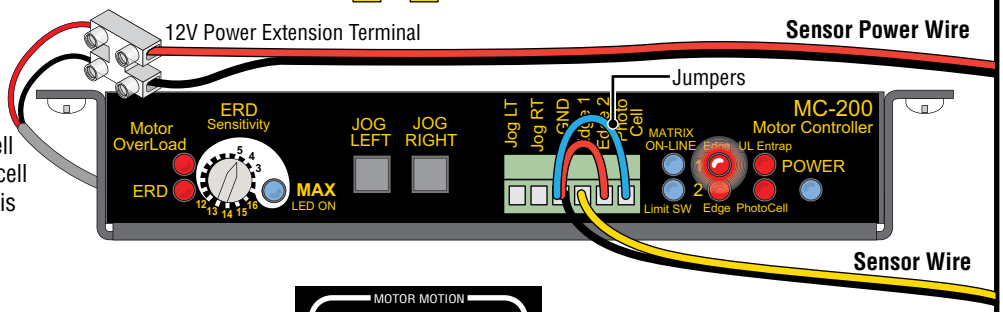

3. Press **STOP** button again within 5 min. to end learn mode, beeping stops.

   NOTE: If **STOP** button is not pressed within 5 min. learn mode automatically end after 5 min.

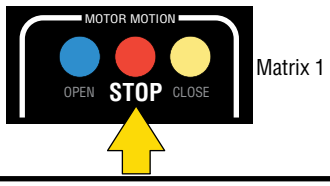

GATE CYCLING TROUBLESHOOTING

Use this table to help with troubleshooting AND operator LED troubleshooting on the next 4 pages.

Refer to MAX Megatron manual for more information.

Gate Symptom	Solutions (what to check)
Gate beeps but will not open or close for any command given.	• Check GATE SHUTOFF switch, it should be OFF. Turn switch ON then OFF again, possible chain drop event and switch needs to be recycled. GATE DISABLE LED should be OFF.
Gate moves slowly.	• Check if OPEN and CLOSE Limits have been learned. Refer to Learn Gate Positions section and learn limits. • Check if GATE SPEED rotary dial is set to MAX position (LED on). • Check if OPEN and CLOSE Limit Rings are secured tight. If rings are not tightened, they will slip on collar. • Check if Clamp is tight using red handle. Use adjustment bolt indicated on handle to make adjustments. • Check if guide pin on limit ring collar is aligned to fit in clamp guide slot. • Check if positive stop on long arm is touching short arm in closed position. If so, re-adjust close limit ring such that there is a min 1/4 inch gap for positive stop. • Gate may be too heavy for operator (check manual for maximum gate weight for your model operator). • Check if “BATTERY IN USE” LED is ON. If so, gate is on Battery back-up mode and battery is running low. • Arm elbow and gate bracket bolts are too tight, loosen bolts. Gate hinges may be too tight.
Gate beeps when opening and closing.	• Operator may be in battery back up mode. check if Mode 1 switch is ON on the back of Matrix 1. • Check if “Gate in Motion” Alarm feature is ON (“Mode 0” switch is on back of Matrix 1 and set to “ON”).
Gate does NOT open.	• Check if Power LEDs are ON on both Matrix 1 and MC-200. Check if “MOTOR ON-LINE” LED and “LIMIT SWITCH ON-LINE” LED are both ON on Matrix 1. • Check if PRIMARY GATE “open RIGHT / open LEFT” switch is set properly. • Check if GATE DISABLE LED is ON. If so, check if GATE DISABLE input is active. • Check if "EDGE 2" LED or "PHOTOCELL" LED is ON or BLINKING on MC-200. If so, check entrapment sensor wiring or missing jumper. • Check if “BATTERY IN USE” LED is ON. IF so, battery may be too low and gate is kept closed (BATTERY BACK-UP MODE switch set to “Leave Closed”).
Gate does NOT close.	• Check if Power LEDs are ON on both Matrix 1 and MC-200. Check if “MOTOR ON-LINE” LED and “LIMIT SWITCH ON-LINE” LED are both ON on Matrix 1. • Check if "EDGE 1" LED is ON on MC-200. If so, check entrapment sensor wiring and alignment. • Check if any loops are active, check SAFETY LOOP, CENTER LOOP or EXIT LOOP LED is ON. • Check if any open command inputs are active (check if LED is ON on the matrix 1 for: RADIO, FIRE DEPT, MAX OPEN, STRIKE, KEYPAD/RDR, PHOTOCELL). Check device connected to the input that LED light is turned ON. • Check if PRIMARY GATE "open RIGHT / open LEFT" switch is set properly. • If "EDGE 2" LED or "PHOTOCELL" LED is ON on MC-200. If so, check entrapment sensor wiring or missing jumper. • If "BATTERY IN USE" LED is ON and BATTERY BACK-UP MODE switch = "leave Open", then battery may be too low and gate is kept OPEN. • If “BATTERY IN USE” LED is ON and BATTERY BACK-UP MODE switch is set to “OPEN 1-TIME”, then if AC power is lost, gate will automatically open 1 time. • If "CLOSE TIMER" is OFF, then gate will not close automatically. A close command (i.e radio, close) is required to close gate. • Loop detector is defective (CENTER, EXIT, or SAFETY). • Loop has a short or open. Measure loop resistance.
Gate stops prematurely and beeps, moves in opposite direction.	• If "ERD" LED is ON, an obstruction (ERD event) is detected. If no apparent obstruction, select a less sensitive ERD setting. • If "EDGE 2" LED is ON, entrapment sensor is triggered or jumper on connector is broken.
Gate will stop before reaching desired limit setting.	• Gate Open and Close Limits have not been learned properly. Relearn limit positions using jog RT and jog LT. • Check if Clamp is on collar guide pin and is mounted securely on output shaft. • Check if PARTIAL OPEN feature is turned ON. Re-learn partial open position or turn off feature. • Only for OPENING gate (not during closing cycle): Check if PARTIAL OPEN feature is turned ON. Relearn partial open position or turn off PARTIAL OPEN feature.
Gate stops abruptly while in motion.	• Bad hinge - hinge pin offsets during motion causing abrupt gate movement. • Operator placement is not proper or arm pivot point on standard gate is not at least 1/4 of gate length (1/3 of gate length for heavy / uphill gates). • If “MATRIX ON-LINE” LED or “LIMIT SWITCH ON-LINE” LED are OFF on MC-200, then check wiring between (MC-200 & Matrix 1) or (MC-200 and Limit switch box). • Check if "PHOTOCELL" LED is ON on MC-200. If so, check entrapment sensor wiring or missing jumper • Motor hall sensor cable may be compromised. Unplug cable from MC-200 “Motor Inputs” and ensure wires are not broken and are crimped properly.
Gate re-opens while closing	• Check if closing photo cell is misaligned with reflector (check photocell on MC-200 "EDGE 1" input or Matrix 1 "Photocell" input.
Gate does not learn new magnet positions.	• Use jog LEFT/RIGHT buttons to learn new positions instead of using open or close buttons on Matrix 1.

MATRIX 1 LED TROUBLESHOOTING

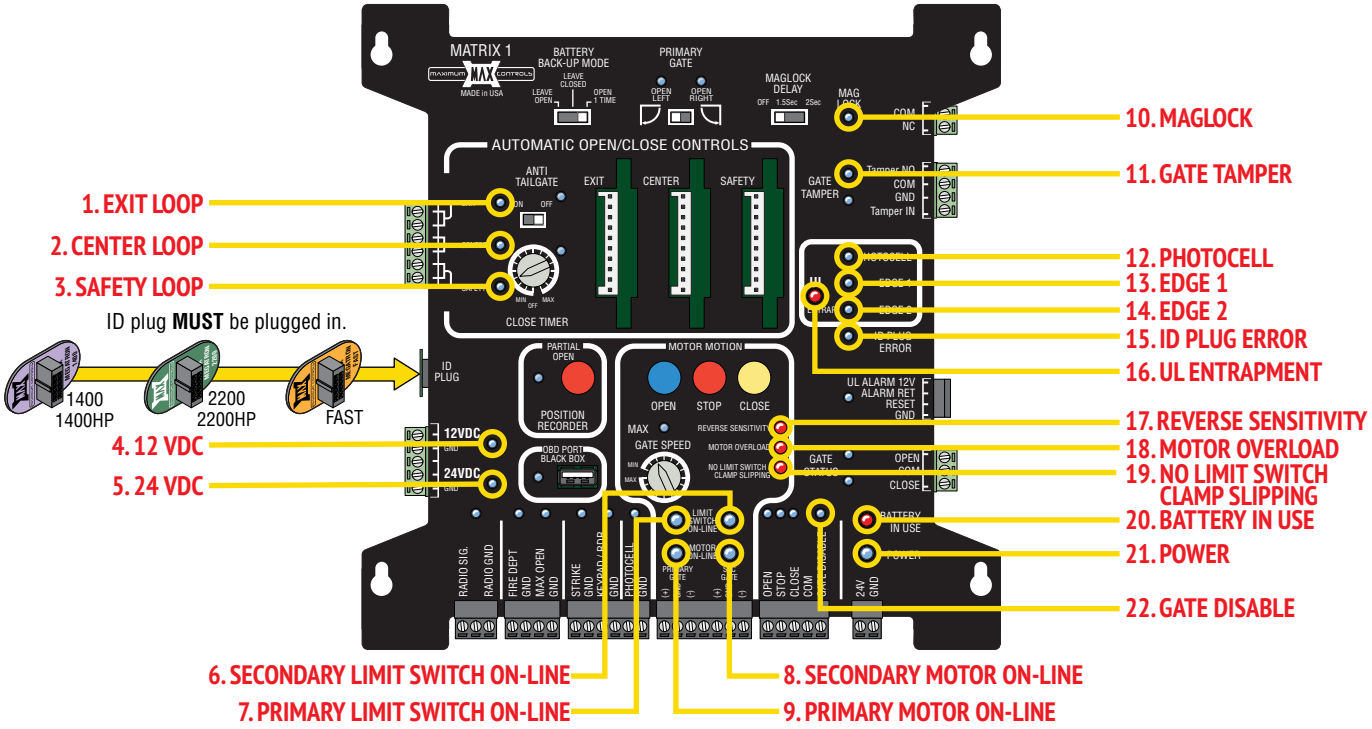

Matrix 1 LED Problem Condition	Normal LED	Solution(s) for Problem Condition
"ID PLUG" LED is FLASHING on Matrix 1 and board beeping	OFF 15	• Insert ID PLUG module that is tethered to chassis into "ID PLUG" connector of Matrix 1.
"POWER" LED is OFF	ON 21	• Check if AC POWER ON/OFF SWITCH is ON. • Check 24 V wiring from MC-200 PRIMARY.
"BATTERY IN USE" LED is ON	OFF 20	• AC power is lost, operator is in battery back-up mode. • Check if AC POWER ON/OFF SWITCH is ON. • Measure power input DC voltage on Matrix 1 ("24V/GND" - 2-pin black connector), (expected reading 34 VDC if AC on, 25VDC if on battery back-up).
"BATTERY IN USE" and "POWER" LED are FLASHING	OFF / ON 20 / 21	• Battery not plugged in to BATTERY IN port on battery charger (BC-7 module)
PRIMARY "MOTOR ON-LINE" LED is OFF	ON 9	• Check wiring between Matrix 1 RS485 (+,-, gnd) and PRIMARY MC-200 RS485 (+,-, gnd) terminals, connect [(+) to (+)], [(-) to (-)] and [GND to GND]
SECONDARY "MOTOR ON-LINE" LED is OFF	ON 8	• Check wiring between Matrix 1 RS485 (+,-, gnd) and SECONDARY MC-200 RS485 (+,-, gnd) terminals, connect [(+) to (+)], [(-) to (-)] and [GND to GND].
PRIMARY "LIMIT SWITCH ON-LINE" LED is OFF	ON 7	• Check if limit switch box is plugged into PRIMARY MC-200 "LIMIT SWITCH" input on back and MC-200 is powered ON.
SECONDARY "LIMIT SWITCH ON-LINE" LED is OFF	ON 6	• Check if limit switch box is plugged into SECONDARY MC-200 "LIMIT SWITCH" input on back and MC-200 is powered ON.
"UL Entrap" LED is ON	OFF 16	• An entrapment event has occurred, check if an entrapment sensor was triggered (see if EDGE 1, EDGE 2, or PHOTOCELL LED is on).
"REVERSE SENSITIVITY" LED is FLASHING	OFF 17	• An ERD event may have occurred. Check for gate obstruction. • ERD sensitivity is too high for application. Re-adjust ERD setting on MC-200, (see 10).
"EDGE 1" LED is ON	OFF 13	• Sensor on EDGE 1 input (photocell or edge) may have detected an obstruction while closing gate. • Photocell on EDGE 1 input is misaligned with reflector.
"EDGE 1" LED is flashing	OFF 13	• Sensor on EDGE 1 input (photocell or edge) may not be wired properly, (see 8). • Sensor is NOT a N.C. monitored sensor that is UL325 2016 compliant. • Sensor might need to be re-learned. • Sensor is damaged or malfunctioning.
"EDGE 2" LED is ON	OFF 14	• Jumper between EDGE 2 and GND is missing or broken (jumper is required if a sensor is not present). Sensor on EDGE 2 input (photocell or edge) may have detected an obstruction while cycling gate. • Photocell on EDGE 2 input is misaligned with reflector.
"EDGE 2" LED is FLASHING	OFF 14	• Sensor on EDGE 2 input (photocell or edge) may not be wired properly, (see 8). • Sensor is NOT a N.C. monitored sensor that is UL325 2016 compliant. • Sensor on EDGE 2 is damaged or malfunctioning. • Sensor might need to be re-learned.

Table continued on next page

MATRIX 1 LED CONTINUED

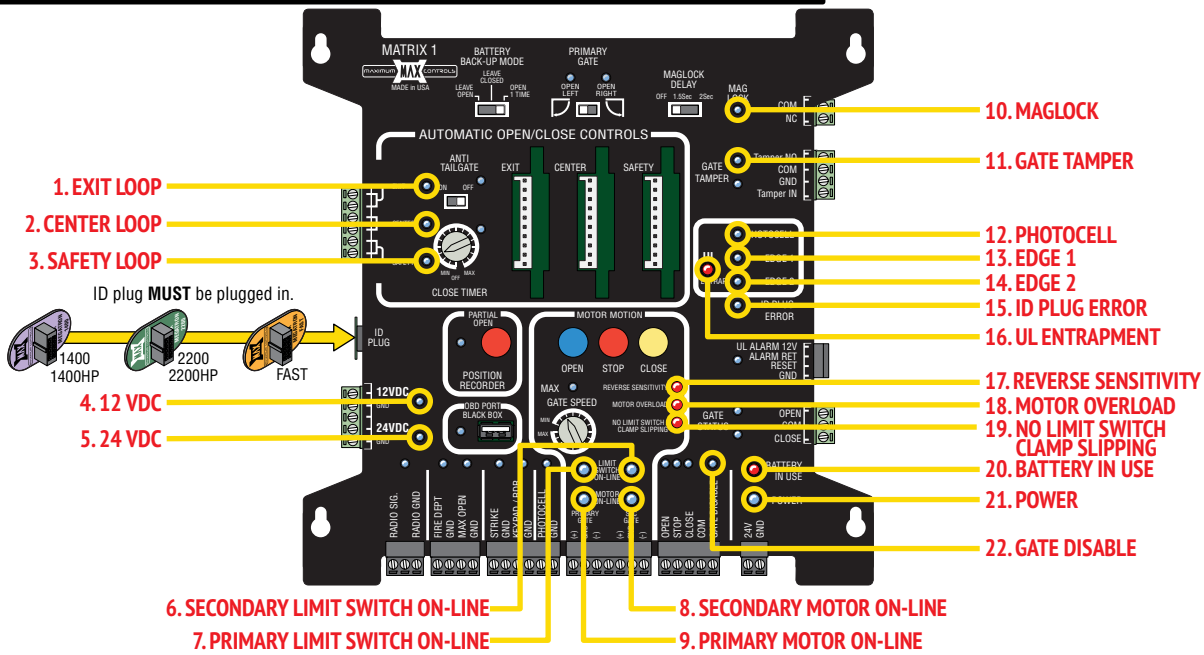

Matrix 1 LED Problem Condition	Normal LED	Solution(s) for Problem Condition
"PHOTOCELL" LED is ON	OFF 12	• Jumper between PHOTOCELL and GND is missing or broken (jumper is required if a sensor is not present). • Sensor on PHOTOCELL input (photocell or edge) may have detected an obstruction while opening or closing gate.
"PHOTOCELL" LED is FLASHING	OFF 12	• Photocell on PHOTOCELL input is misaligned with reflector. • Sensor on PHOTOCELL input (photocell or edge) may not be wired properly, (see 8). • Sensor is NOT a N.C. monitored sensor that is UL325 2016 compliant. • Sensor on PHOTOCELL is damaged or malfunctioning. • Sensor might need to be re-learned.
"MOTOR OVERLOAD" LED is ON	OFF 18	• Check if gate is binding against catch post or bracket in opened or closed position. • Check if gate moves manually with low resistance throughout its full range of motion. • Check if hinges are operational and well greased. • Check if operator is positioned properly relative to the gate hinge, (see 1).
"NO LIMIT SW / CLAMP SLIPPING" LED is ON	OFF 19	• Gate may be too heavy for operator (check manual for maximum gate capacity). • Check if OPEN / CLOSE limit rings are tightened. • Check that clamp is tight on output shaft of operator.
"EXIT" LOOP LED is FLASHING or contstantly ON	OFF 1	• Loop fault condition: Check if EXIT loop wires are connected into to loop input connector properly. • Check if loop detector is inserted properly in Matrix 1 slot. • Set unique loop detector frequency for each loop detector used. • Loop Detector might be defective. Replace defective loop detector. NOTE: RENO loop detector LED's flash as default, but function normally (ignore the flashing).
"SAFETY" LOOP LED is FLASHING or contstantly ON	OFF 3	• Loop fault condition: check if SAFETY loop wires are connected into to loop input connector properly. • Check if SAFETY loops are wired in series. • Check if loop detector is inserted properly in Matrix 1 slot. • Set unique loop detector frequency for each loop detector used. • Loop Detector might be defective. Replace defective loop detector. NOTE: RENO loop detector LED's flash as default, but function normally (ignore the flashing).
"CENTER" LOOP LED is FLASHING or contstantly ON	OFF 2	• Loop fault condition: check if CENTER loop wires are connected into to loop input connector properly. • Check if CENTER loops are wired in series. • Check if loop detector is inserted properly in Matrix 1 slot. • Set unique loop detector frequency for each loop detector used. • Loop Detector might be defective. Replace defective loop detector. NOTE: RENO loop detector LED's flash as default, but function normally (ignore the flashing).
"GATE DISABLE" LED is ON	OFF 22	• Check if an external device is triggering GATE DISABLE input on Matrix 1. Disconnect devices individually to determine possible false triggering of GATE DISABLE.
"MAG LOCK" LED is FLASHING	OFF 10	• Maglock power is lost. Check if maglock power transformer is wired properly to Matrix 1 or needs to be replaced.
"GATE TAMPER" LED is FLASHING	OFF 11	• Gate was manually moved off of its CLOSED position causing Tamper Relay to trigger for few seconds.
"12VDC" LED is OFF. "24VDC" LED is OFF	ON 4 or 5	• Check for a short in wiring to connected device. DO NOT power external keypads or telephone entry to this port (only use for radio receiver / photocell).

MC-200 LED TROUBLESHOOTING

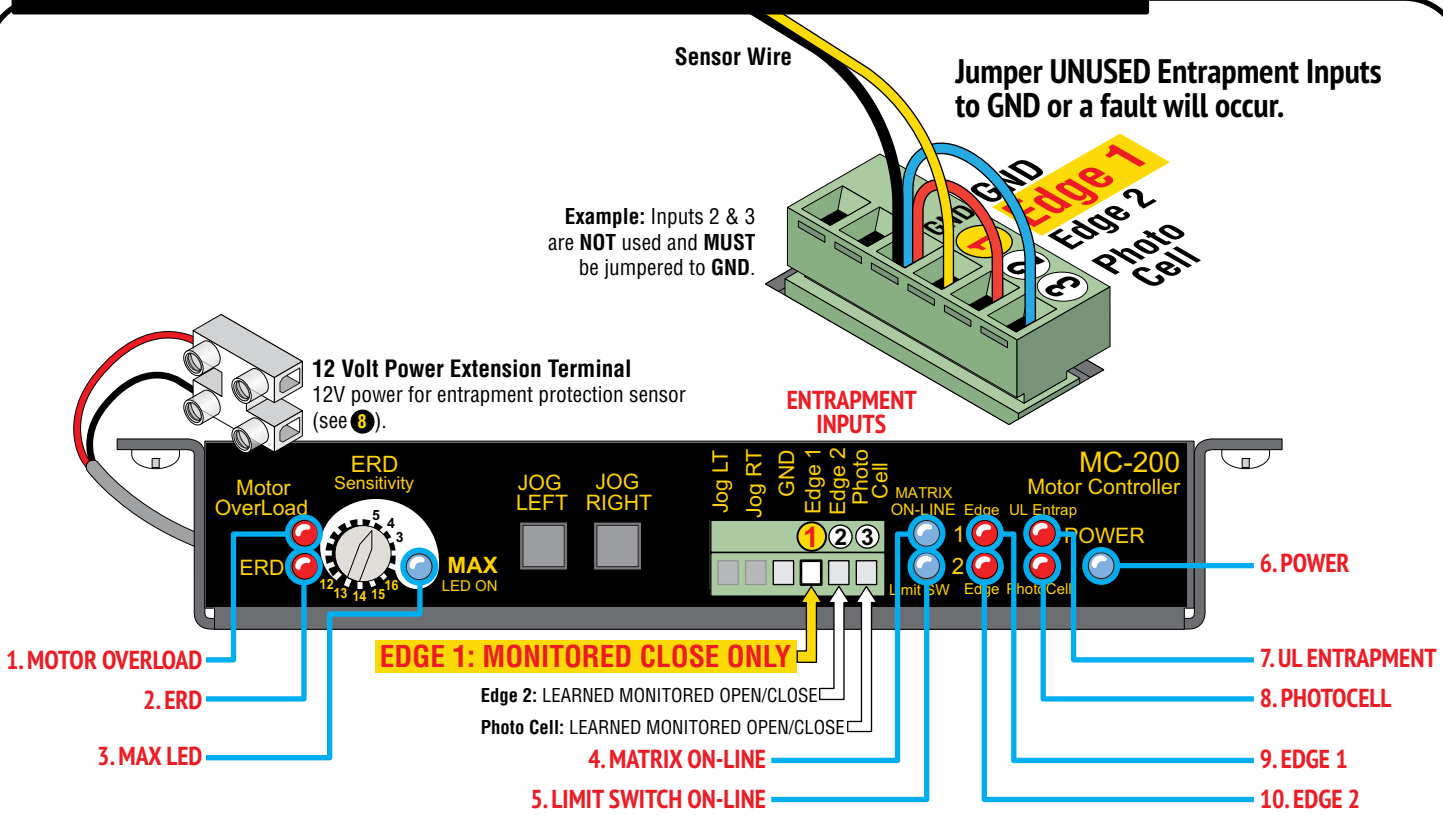

MC-200 LED Problem Condition	Normal LED	Solution(s) for Problem Condition
"POWER" LED is OFF	ON 6	• Check if AC POWER ON/OFF SWITCH (on MAX toroid box) is ON. • Check if power cable is plugged into back of MC-200 "Power In" input.
"MATRIX ON-LINE" LED is OFF	ON 4	• Check wiring between Matrix 1 RS485 (+,-, gnd) and MC-200 RS485 (+,-, gnd) terminals. Connect [(+) to (+)], [(-) to (-)] and [GND to GND].
"Limit SW ON-LINE" LED is OFF	ON 1	• Check if limit switch box is plugged into MC-200 "LIMIT SWITCH" input on back.
"MOTOR OVERLOAD" LED is ON	OFF 7	• Check if gate is binding against catch post or bracket in opened or closed position. • Check if gate moves manually with low resistance throughout its full range of motion. • Check if hinges are operational and well greased. • Check if operator is positioned properly relative to the gate hinge, (see 1). • Gate may be too heavy for operator (check manual for maximum gate weight for your model operator).
"UL Entrap" LED is ON	OFF 7	• An entrapment event has occurred, check an entrapment sensor was triggered (see if ERD, EDGE 1, EDGE 2, or PHOTOCELL LED is on).
"ERD" LED is ON	OFF 2	• An ERD event may have occurred. Check for gate obstruction. • ERD sensitivity is too high for application. Re-adjust ERD setting on MC-200, (see 10).
"EDGE 1" LED is ON	OFF 9	• Sensor on EDGE 1 input (photocell or edge) may have detected an obstruction while closing the gate. • Photocell on EDGE 1 input is misaligned with reflector.
"EDGE 1" LED is flashing	OFF 9	• Sensor on EDGE 1 input (photocell or edge) may not be wired properly, (see 8). • Sensor is NOT a N.C. monitored sensor that is UL325 2016 compliant. • Sensor is damaged or malfunctioning.
"EDGE 2" LED is ON	OFF 10	• Jumper between EDGE 2 and GND is missing or broken (jumper is required if a sensor is not present). • Sensor on EDGE 2 input (photocell or edge) may have detected an obstruction while opening or closing the gate. • Photocell on EDGE 2 input is misaligned with reflector. • Sensor is NOT a N.C. monitored sensor that is UL325 2016 compliant.
"EDGE 2" LED is FLASHING	OFF 10	• Sensor on EDGE 2 input (photocell or edge) may not be wired properly, (see 8). • Sensor on EDGE 2 is damaged or malfunctioning. • Sensor is NOT a N.C. monitored sensor that is UL325 2016 compliant.
"PhotoCell" LED is ON	OFF 8	• Jumper between PHOTOCELL and GND is missing or broken (jumper is required if a sensor is not present). • Sensor on PHOTOCELL input (photocell or edge) may have detected an obstruction while opening or closing gate.
"PhotoCell" LED is FLASHING	OFF 8	• Photocell on PHOTOCELL input is misaligned with reflector. • Sensor on PHOTOCELL input (photocell or edge) may not be wired properly, (see 8). • Sensor is NOT a N.C. monitored sensor that is UL325 2016 compliant. • Sensor on PHOTOCELL is damaged or malfunctioning
"MAX" LED is ON	OFF 3	• MOST sensitive setting for ERD entrapment detection. Select a less sensitive setting (recommend level 10 thru 16)

BC-7 MODULE LED TROUBLESHOOTING

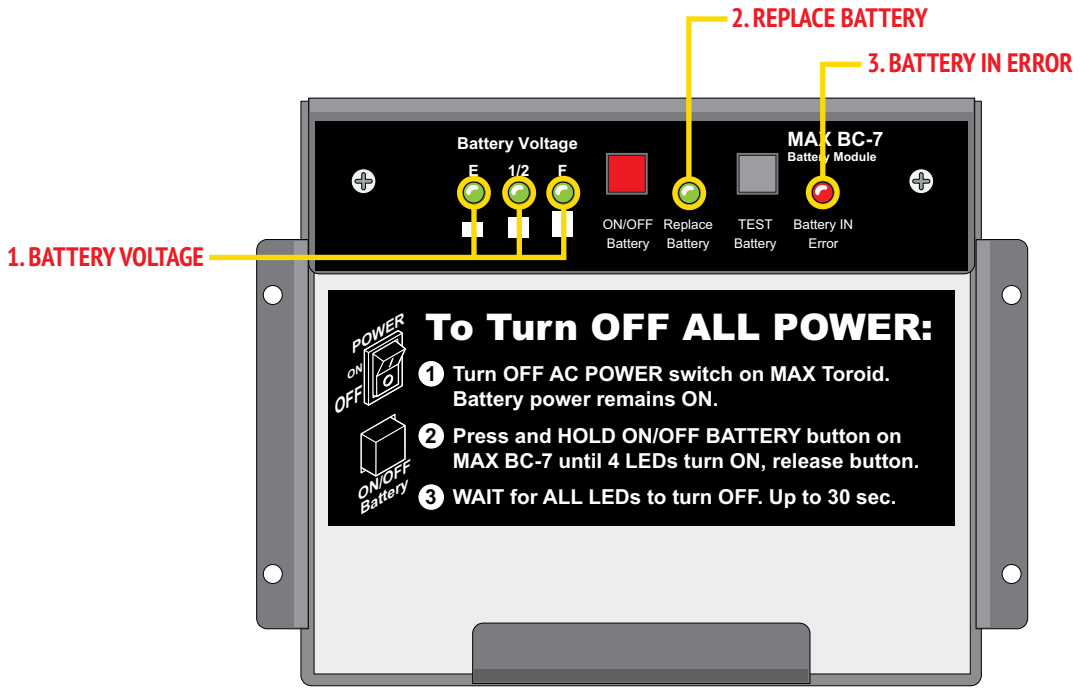

BC-7 LED Problem Condition	Normal LED	Solution(s) for Problem Condition
"BATTERY VOLTAGE (E 1/2 F)" LEDs, only "E" is ON.	1	• Battery is very LOW. Check if AC power ON/OFF switch is ON. If so, check AC power.
"BATTERY IN ERROR" LED is ON.	OFF 3	• "BATTERY Plug" not plugged in to "BATTERY IN" port on battery module (see below).
"REPLACE BATTERY" LED is ON.	OFF 2	• Battery needs to be replaced if BATTERY TEST fails and "REPLACE BATTERY" LED is ON.

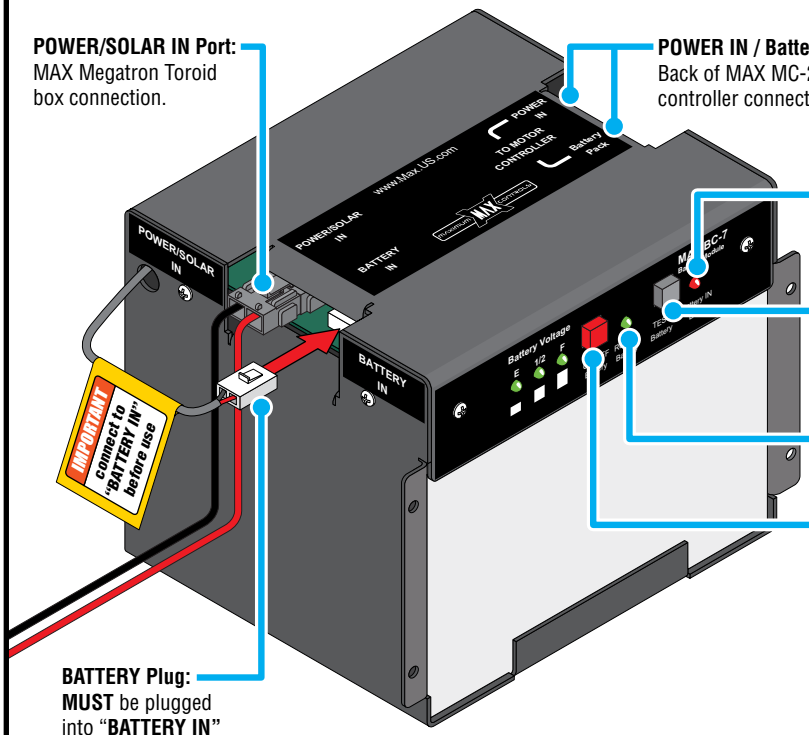

Commonly used Safety Sensor Wiring

MAXIMUM MAX CONTROLS
www.max.us.com

OMRON E3K-R10K4

Photocell (Reflector) CLOSING Direction

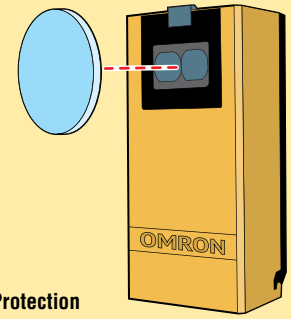

NOTE: To meet the UL 325 2016 standard, Type B1 Non-Contact sensor entrapment protection device MUST be MONITORED by the gate operator.

Installation Steps:

1. Set switch to "LIGHT ON"
2. Wire 12V power to photocell
3. Wire MC-200 **EDGE 1** to photocell **NO1**
   Wire MC-200 **GND** to photocell **C-1**
4. Align photocell to reflector
5. Adjust sensitivity

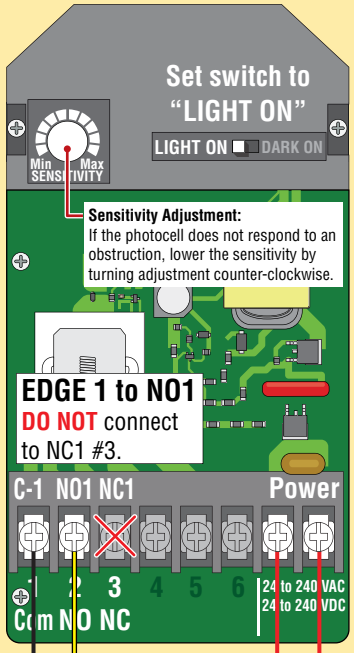

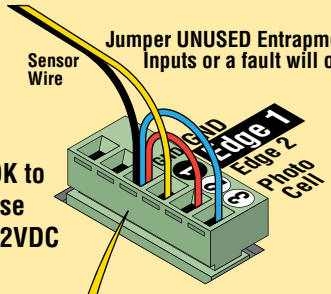

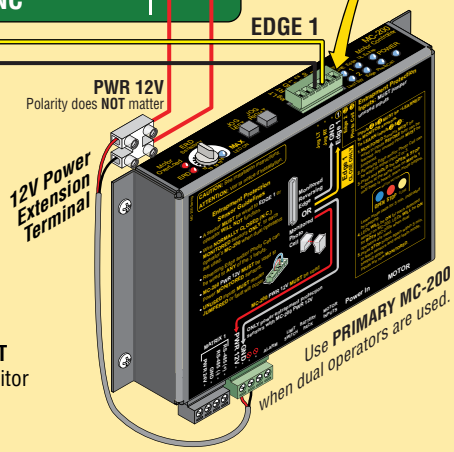

NOTE: DO NOT use 10K Resisitor included with photocell.

IMPORTANT: Photocell **MUST** be in alignment with reflector or fault will occur.

IMPORTANT: Photocell MUST be powered by MAX MC-200 or it will **NOT** be **MONITORED**.

NOTE: To meet the UL 325 2016 standard, Type B1 Non-Contact sensor entrapment protection device MUST be MONITORED by the gate operator.

EMX IRB-RET

Photocell (Reflector) CLOSING Direction

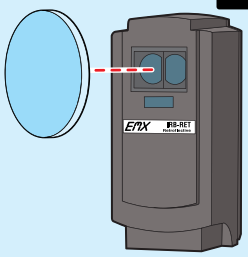

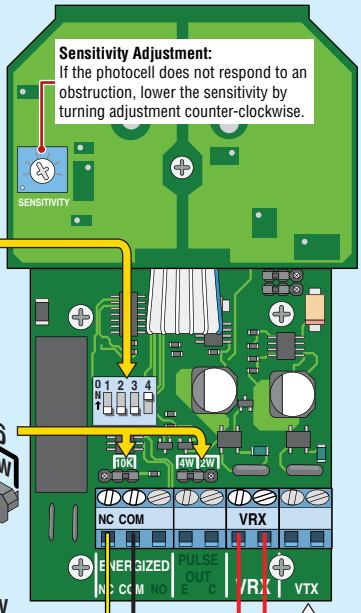

DIP-Switches

1 - OFF
2 - OFF
3 - OFF
4 - ON

NOTE: Power must be cycled when switches are changed.

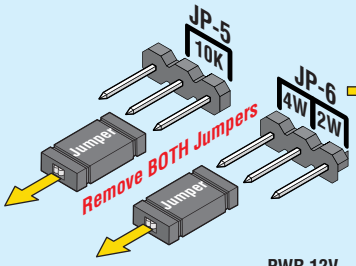

Installation Steps:

1. Set DIP-switches
2. Remove jumpers JP-5 and JP-6
3. Wire 12V power to photocell **(VRX)**
4. Wire MC-200 **EDGE 1** to photocell **NC (Energized)**
   Wire MC-200 **GND** to photocell **COM (Energized)**
5. Align photocell to reflector
6. Adjust sensitivity

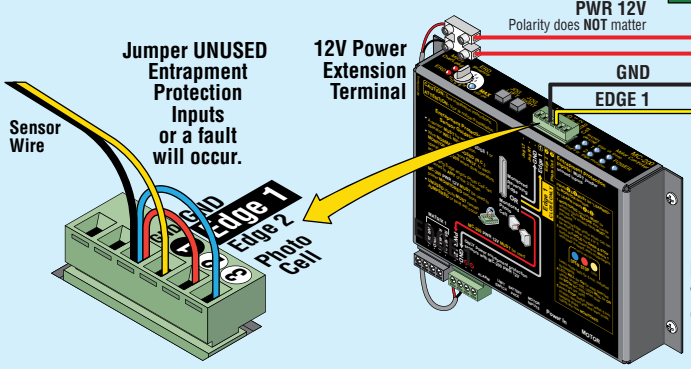

Power NOTE: If photocell does **NOT** function using **VRX** power input, connect power to **VTX** input instead.

EMX IRB-MON

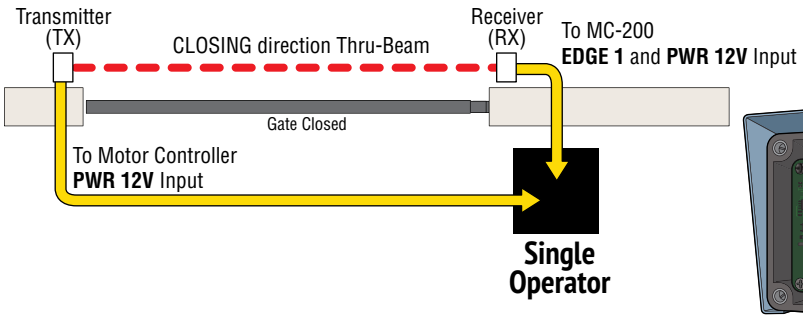

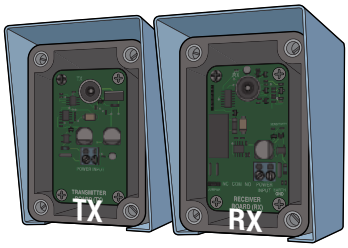

IMPORTANT: Photocells **MUST** be in alignment or fault will occur. Green LED will remain **ON** receiver when in proper alignment.

Transmitter (TX)

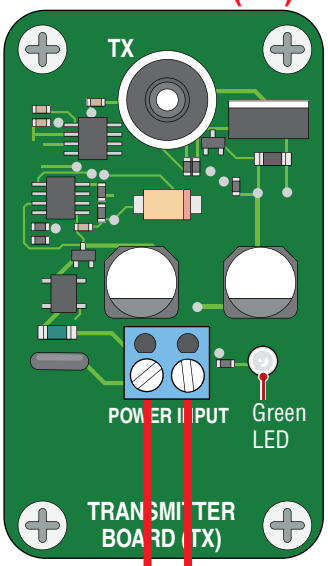

Installation Steps:

1. Set DIP-switches on receiver.
2. Install jumper on receiver.
3. Wire **12V** MC-200 power to receiver.
4. Wire MC-200 **EDGE 1** to receiver photocell **NC.** Wire MC-200 **GND** to receiver photocell **COM.**
5. Wire **12V** MC-200 power to transmitter.
6. Align photocells.
7. Adjust sensitivity on receiver.

Receiver (RX)

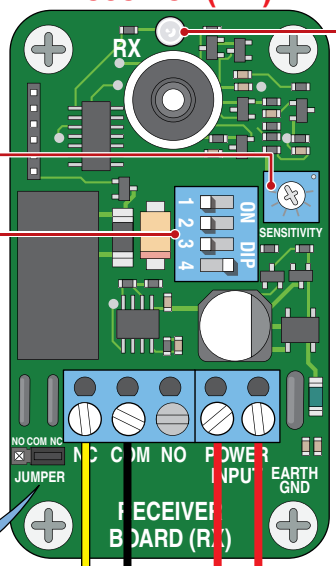

Sensitivity Adjustment: If the photocell does not respond to an obstruction, lower the sensitivity by turning adjustment counter-clockwise.

DIP-switches: 1, 2, 3 are **OFF.** Switch 4 is **ON** If trouble occurs, try turning switch 4 OFF.

NOTE: Power must be cycled when switches are changed.

Jumper **MUST** be on Com-NC.

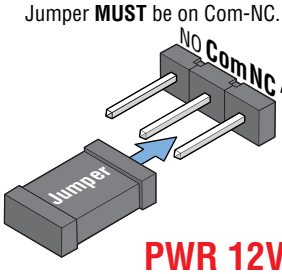

IMPORTANT: Photocells MUST be powered by MC-200 or they will **NOT** be **MONITORED**.

PWR 12V
Polarity does **NOT** matter

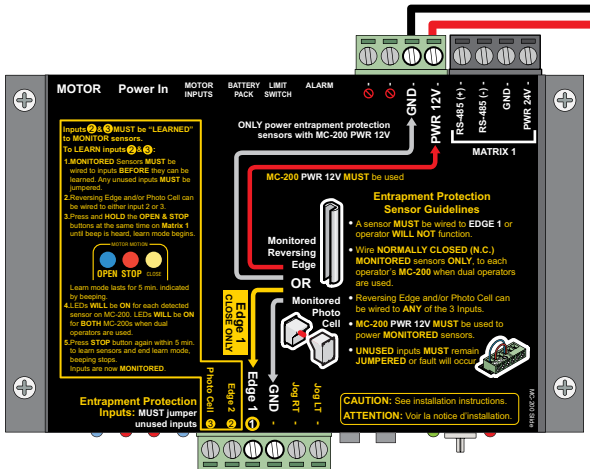

MAX
MC-200

Power Extension Terminal

Jumper **UNUSED** Entrapment Protection Inputs to **GND** or a fault will occur.

Edge 1 - Normally Closed

GND - Common

NOTE: To meet the UL 325 2016 standard, Type B1 Non-Contact sensor entrapment protection device MUST be MONITORED by the gate operator.

UL 325 2016 Standard-Megatron Quick Install Rev 10

EMX IRB-MON Photocell (Thru-Beam) CLOSING Direction Dual Gate Operators

To Motor Controller **PWR 24V** Input

Transmitter (TX)

CLOSING direction Thru-Beam EMX IRB-MON Photocell

Receiver (RX)

To Motor Controller **EDGE 1** and **PWR 12V** Input

Gates Closed

Secondary Operator
NO Matrix 1

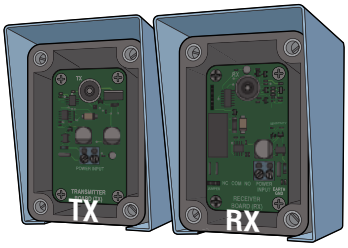

IMPORTANT: Photocells **MUST** be in alignment or fault will occur. Green LED will remain **ON** receiver when in proper alignment.

Primary Operator
Matrix 1

Transmitter (TX)

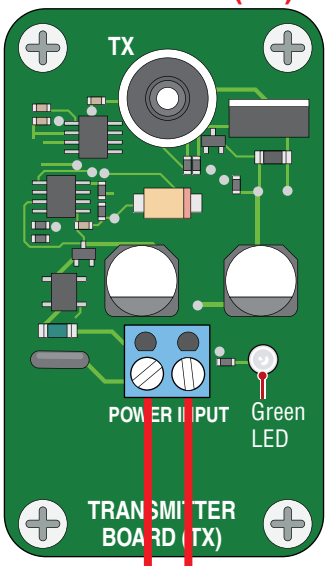

Installation Steps:

1. Set DIP-switches on receiver.
2. Install jumper on receiver.
3. Wire **12V** Primary MC-200 power to **receiver**.
4. Wire Primary MC-200 **EDGE 1** to receiver photocell **NC.** Wire Primary MC-200 **GND** to receiver photocell **COM.**
5. Wire **24V** Secondary MC-200 power to **transmitter**.
6. Align photocells.
7. Adjust sensitivity on receiver.

IMPORTANT: Photocells MUST be powered by MC-200s or they will **NOT** be **MONITORED**.

Receiver (RX)

Sensitivity Adjustment: If the IRB-MON does not respond to an obstruction, lower the sensitivity by turning adjustment counter-clockwise.

Green LED

DIP-switches: 1, 2, 3 are **OFF.** Switch 4 is **ON** If trouble occurs, try turning switch 4 OFF.

NOTE: Power must be cycled when switches are changed.

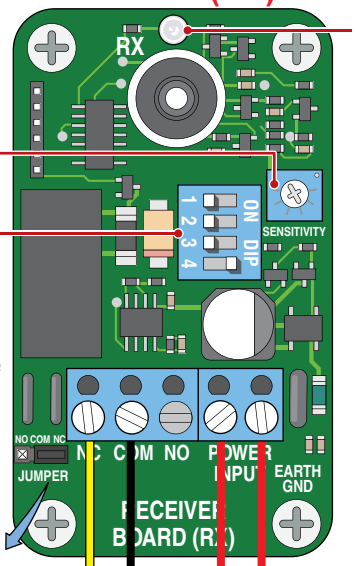

Jumper **MUST** be on Com-NC.

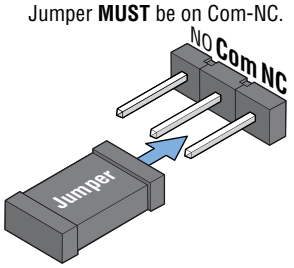

Common-GND

Normally Closed

Edge 1

DO NOT wire Transmitter (TX) to Secondary MC-200 PWR 12V!

PWR 24V
Polarity does **NOT** matter

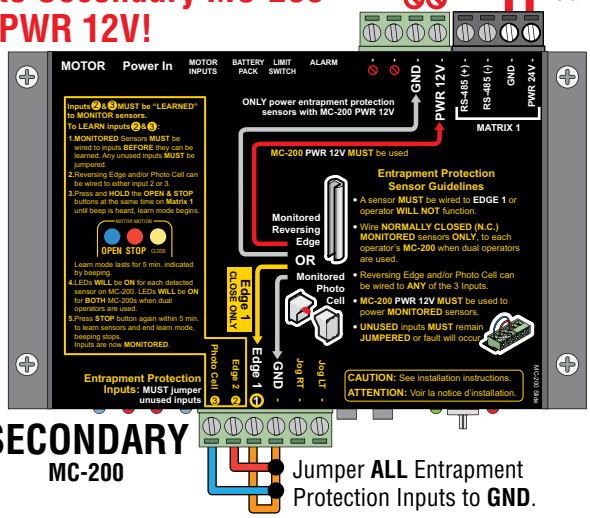

SECONDARY
MC-200

Jumper **ALL** Entrapment Protection Inputs to **GND**.

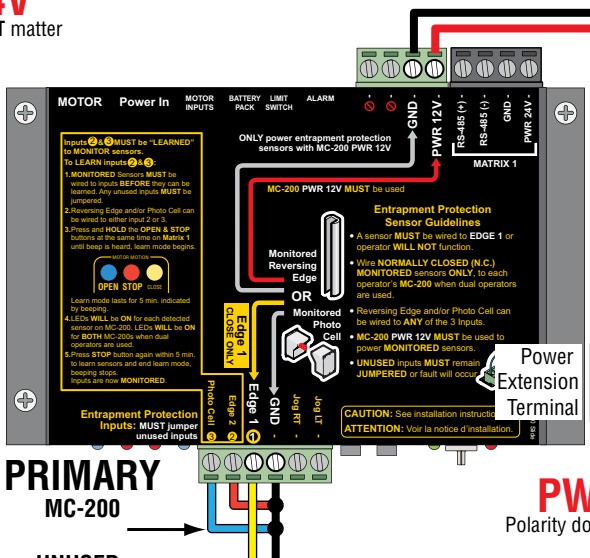

Power Extension Terminal

PRIMARY
MC-200

Jumper **UNUSED** Entrapment Protection Inputs to **GND** or a fault will occur.

PWR 12V
Polarity does **NOT** matter

NOTE: To meet the UL 325 2016 standard, Type B1 Non-Contact sensor entrapment protection device MUST be MONITORED by the gate operator.

UL 325 2016 Standard-Megatron Quick Install Rev 10

MILLER GATE LINK 2 Channel Wireless Communication

Use **PRIMARY** MC-200 when dual operators are used.

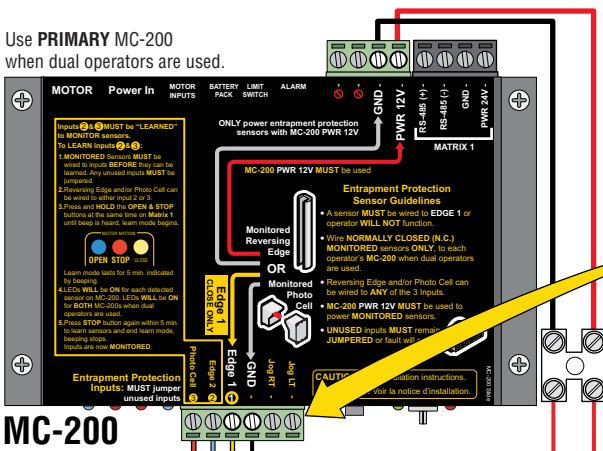

MC-200

Jumper

To PWR 12V and GND
Polarity does NOT matter.

Edge 1

Edge 2

GND

IMPORTANT: Receiver **MUST** be powered by MC-200 or it will **NOT** be **MONITORED**.

Jumper UNUSED Entrapment Protection Inputs or a fault will occur.

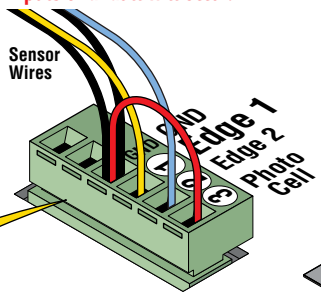

Power Extension Terminal

Example: Input 3 is **NOT** used and **MUST** be jumpered to **GND**.

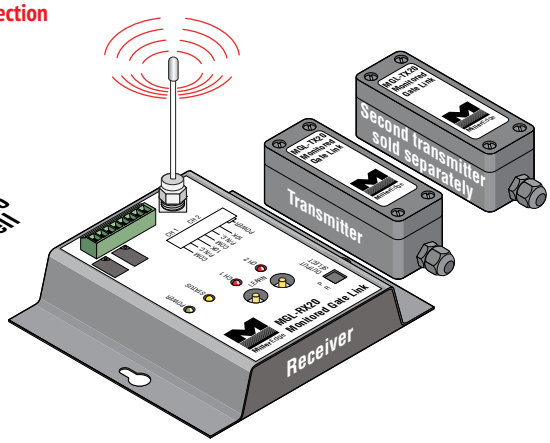

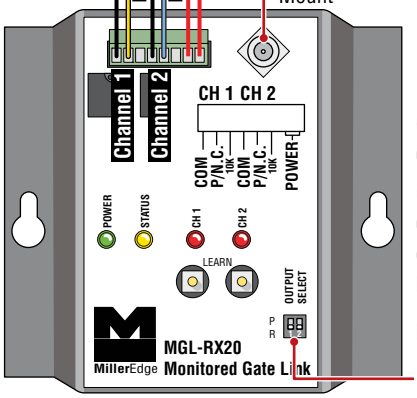

MGL-RX20 Receiver

NOTE:
Edge 1 - CLOSING direction **ONLY**
Edge 1 is automatically MONITORED.
Edge 2 - "Learned" Open/Close direction
See installation steps #10 note below.

CLOSING 10K sensing edge connected to Channel 1 (Edge 1).

OPENING 10K sensing edge connected to Channel 2 (Edge 2).

Channel 1 & 2 transmitters **MUST** be programmed by receiver. See below and Miller Edge Gate Link MGL-K20 instruction sheet for more info.

Both DIP-switches (Channel 1 & 2) to "**R**" **DO NOT** set to "P" Pulsed

Wire 10K Edges

MGL-TX20 Transmitter

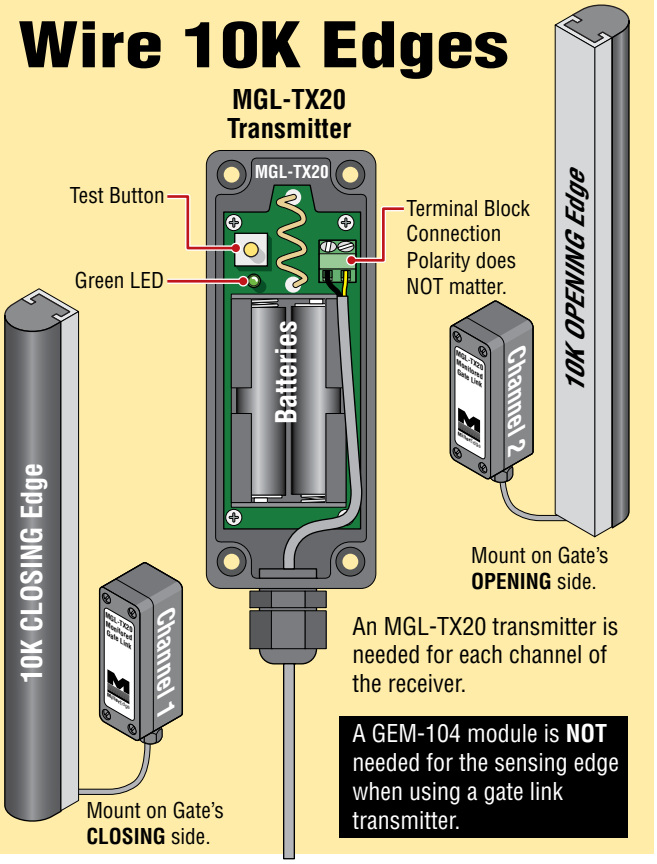

An MGL-TX20 transmitter is needed for each channel of the receiver.

A GEM-104 module is **NOT** needed for the sensing edge when using a gate link transmitter.

Installation Steps:

1. Set Both DIP-switches to "**R**" on receiver
2. Wire 12V power to receiver, polarity does not matter
3. Wire MC-200 **EDGE 1** to receiver **CH 1-P/N.C.**
   Wire MC-200 **GND** to receiver **CH 1-COM**
4. Wire MC-200 **EDGE 2** to receiver **CH 2-P/N.C.**
   Wire MC-200 **GND** to receiver **CH 2 - COM**
5. Install antenna on receiver
6. Install batteries in transmitters
7. Wire **Channel 1** Transmitter to **CLOSING** Edge **ONLY**
8. Wire **Channel 2** Transmitter to **OPENING** Edge
9. Program Channel 1 and 2 on MGL-RX20 receiver
10. Program MAX MC-200 to "LEARN" Edge 2

NOTE: Edge 2 will function without being "Learned" but will NOT be MONITORED by the MAX gate operator.
See Max operator manual to program the MAX MC-200 to "Learn" Edge 2 if desired.

Gate Link Receiver/Transmitter Programming:

1. Make sure receiver and transmitters have power.
2. Green power LED stays ON; CH 1 red LED will be blinking on receiver.
3. To enter Learn mode, press the CH 1 Learn button for 1 sec. The red led remains ON and the amber status LED will blink.
4. Activate the transmitting edge, the red and amber LEDs will alternately blink rapidly on receiver. Then the red LED will go out and the amber LED will remain ON.
5. Channel 1 is now programmed. Repeat steps for Channel 2.
6. To start over or erase programming, press and hold both LEARN buttons for 3 seconds. The LEDs will blink rapidly and then go into "fault" mode. Repeat the programming steps above.

UL 325 2016 Standard-Megatron Quick Install Rev 10

MAXIMUM MAX CONTROLS

www.max.us.com

CONFORMS TO UL STD 325
UL CLASS - I, II, III, IV

CERTIFIED TO CAN/CSA STD
C22.2 NO. 247

SAFETY SENSORS REQUIRED

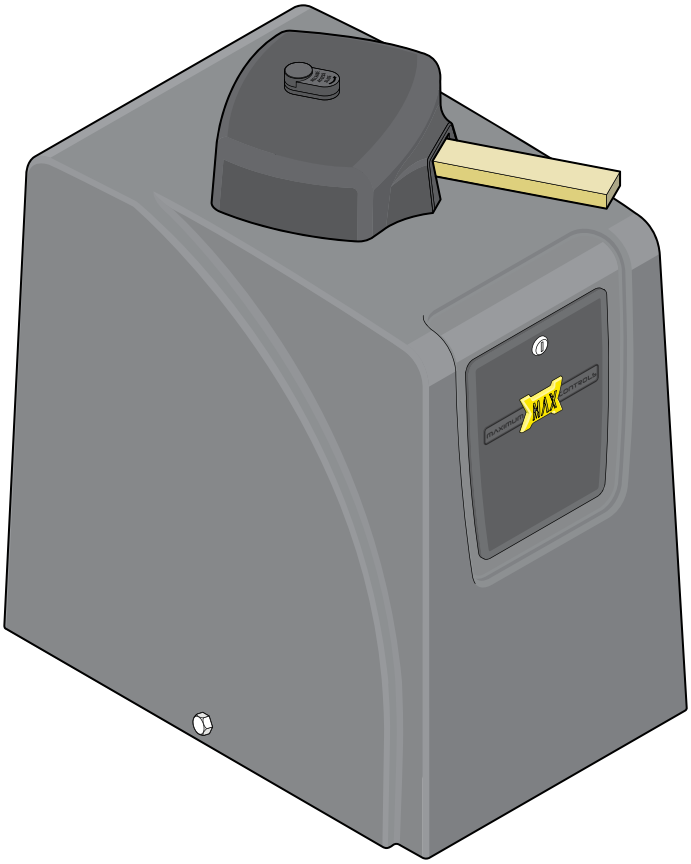

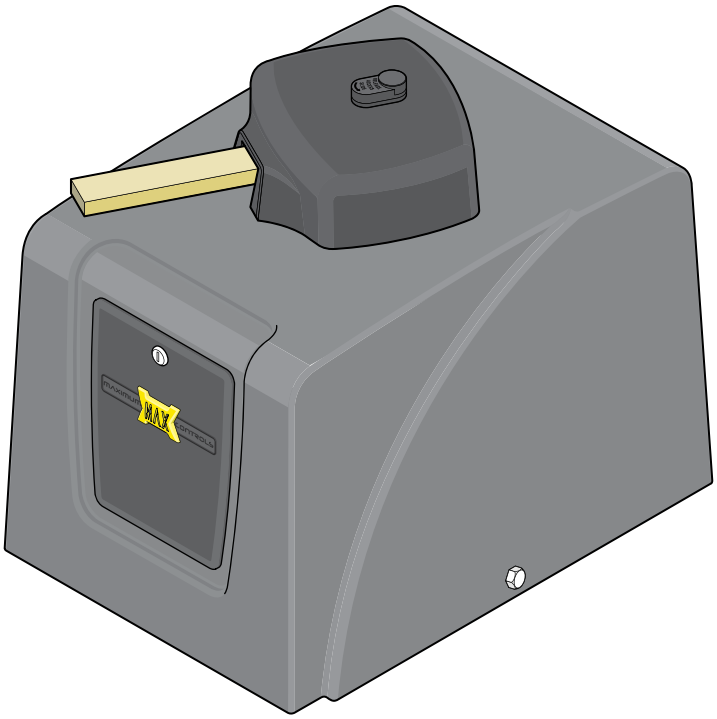

Residential / Commercial Brushless DC Swing Gate Operators

Made in USA

C ETL LISTED US
Intertek
4009963

Maximum Controls LLC.
10530 Lawson River Ave
Fountain Valley, Ca 92708
Tel: (949) 699-0220

Version 10